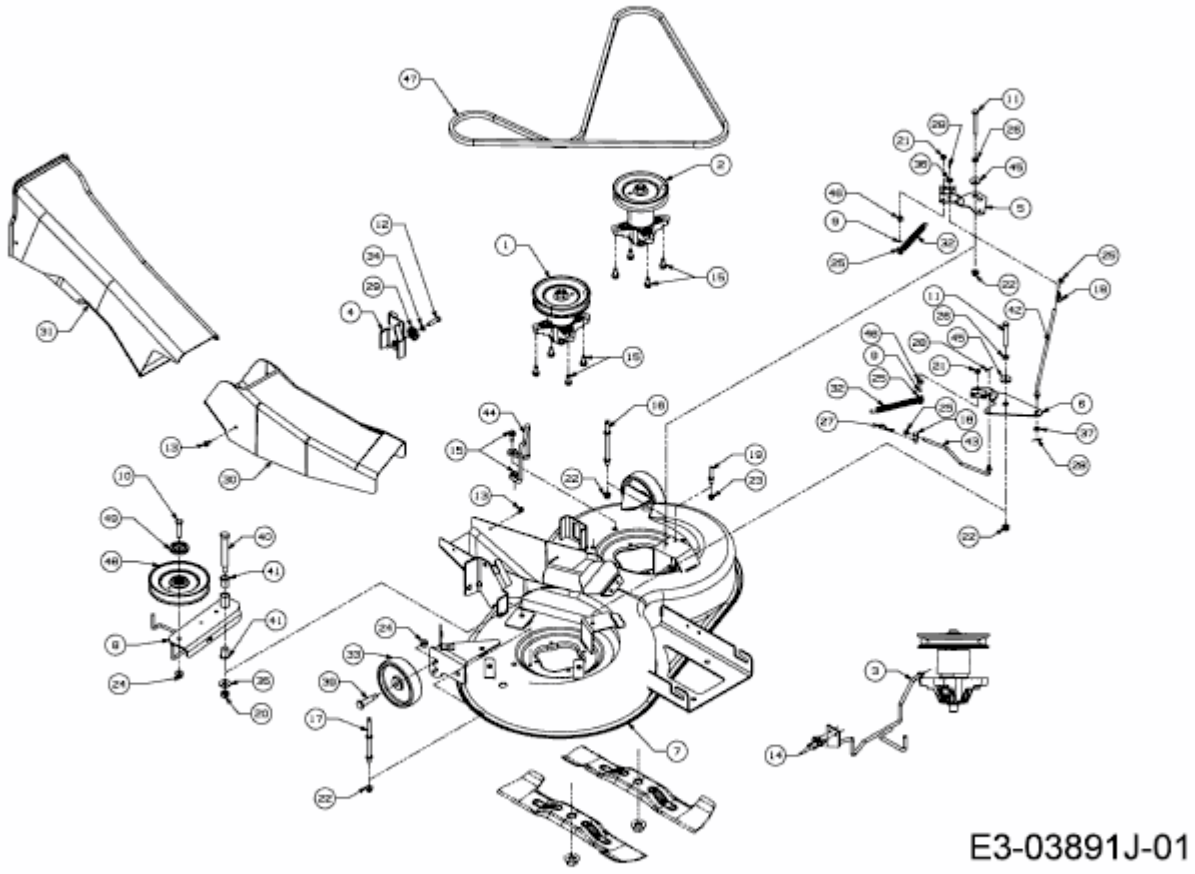DL 92 H > 13H2715E677 (2016) > MÄHWERK E (36"/92CM)