HE 5150 > 13DV514E643 (2008) > ARMATURENBRETT

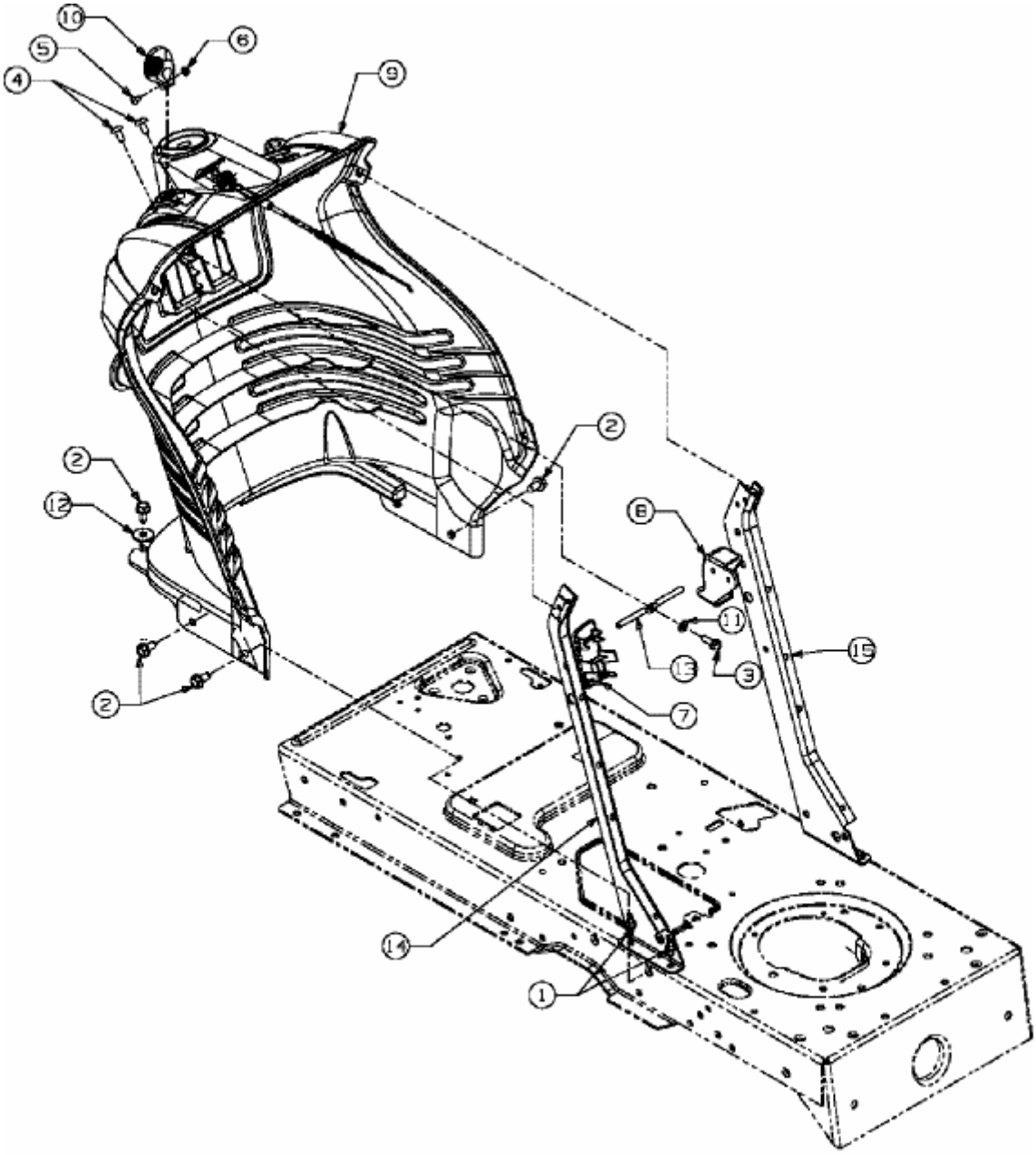

E3-02067B-01