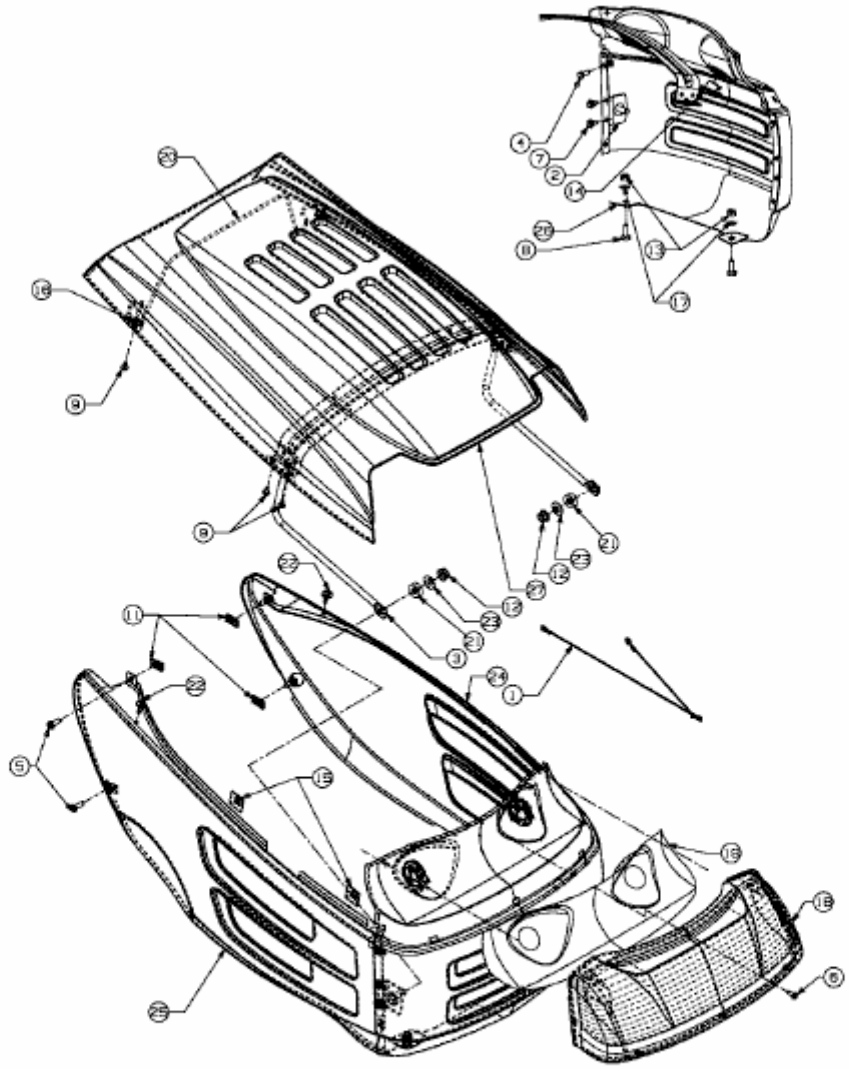150 KL > 13DV478F460 (2006) > MOTORHAUBE 8-STYLE