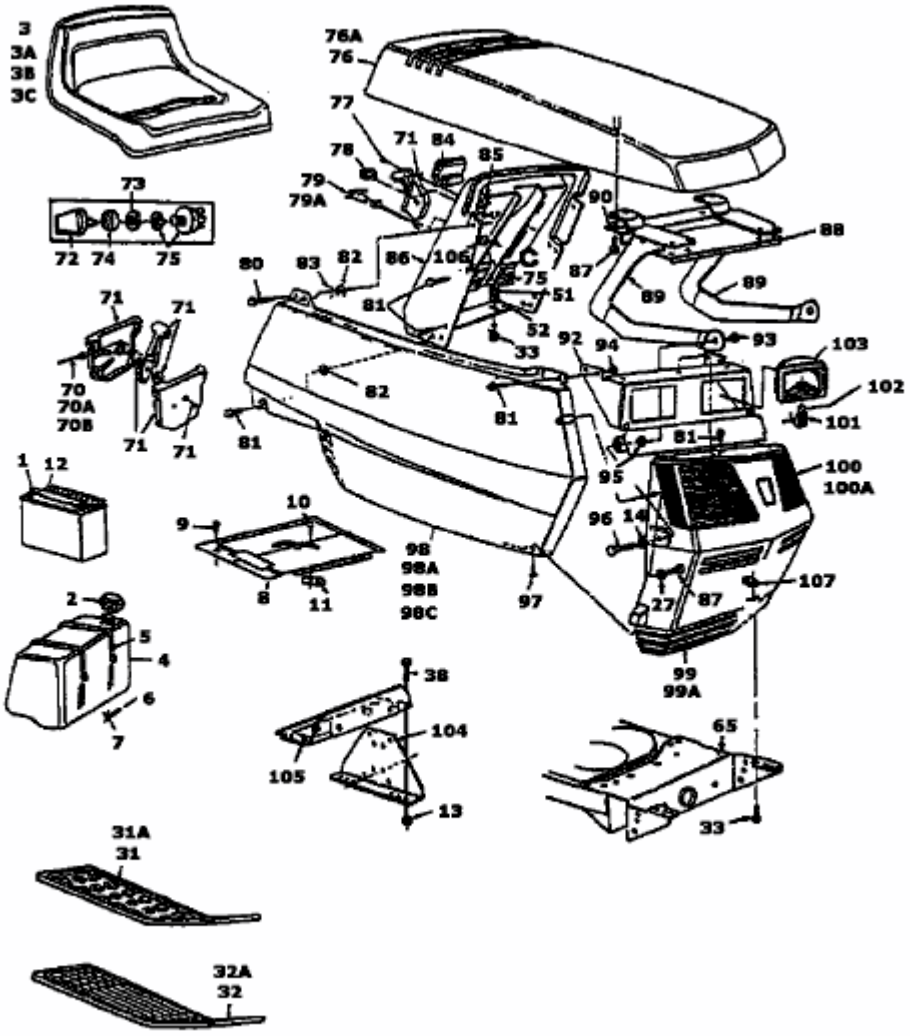E 2000 MILLENIUM EDITION > 13DU764N678 (2000) > MOTORHAUBE 4-STYLE AB 27.09.2007