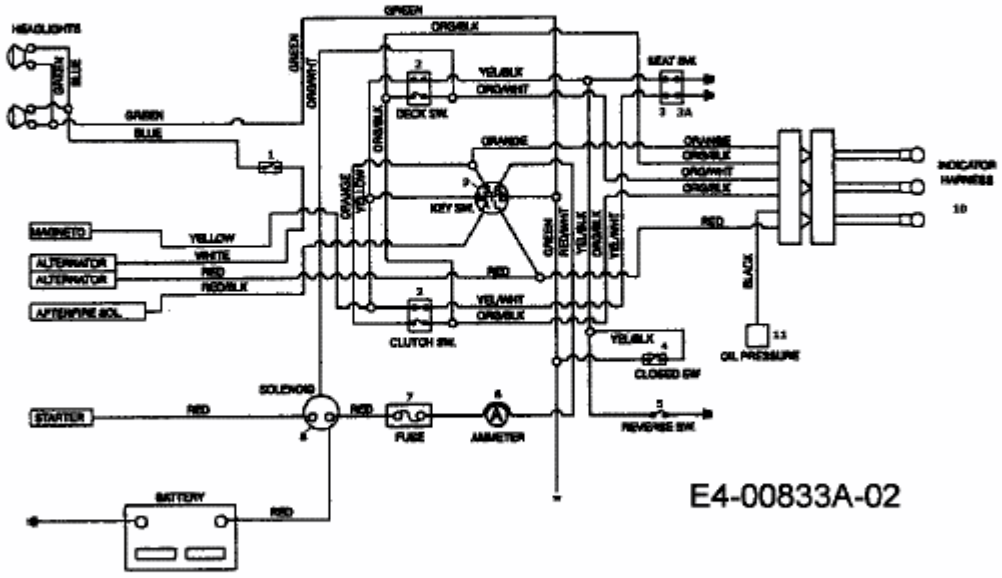Wire Harness (Manual PTO With Indicator Lights)