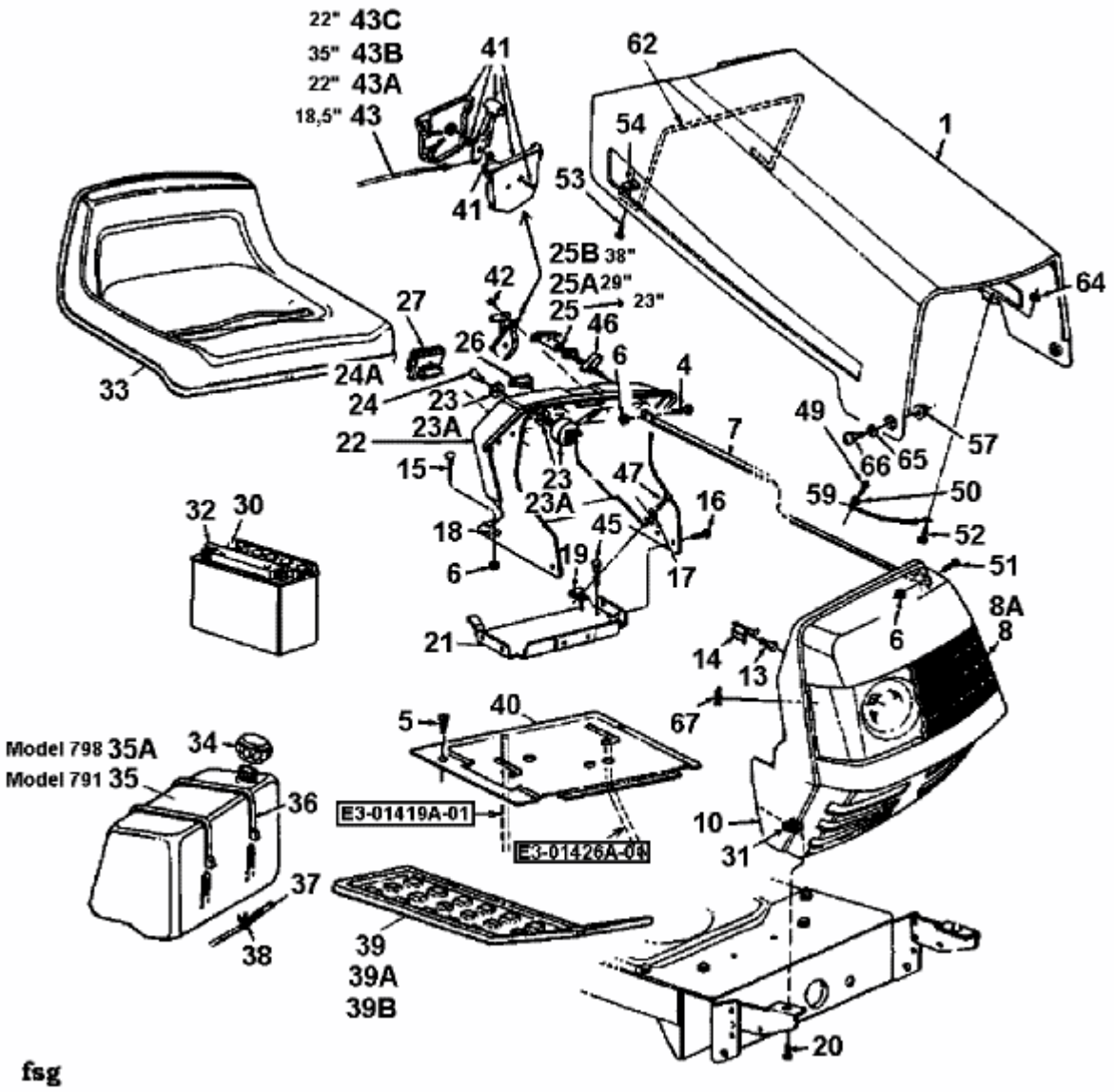SPRINT SLX 102 RH > 13DT796N690 (2000) > MOTORHAUBE 1-STYLE