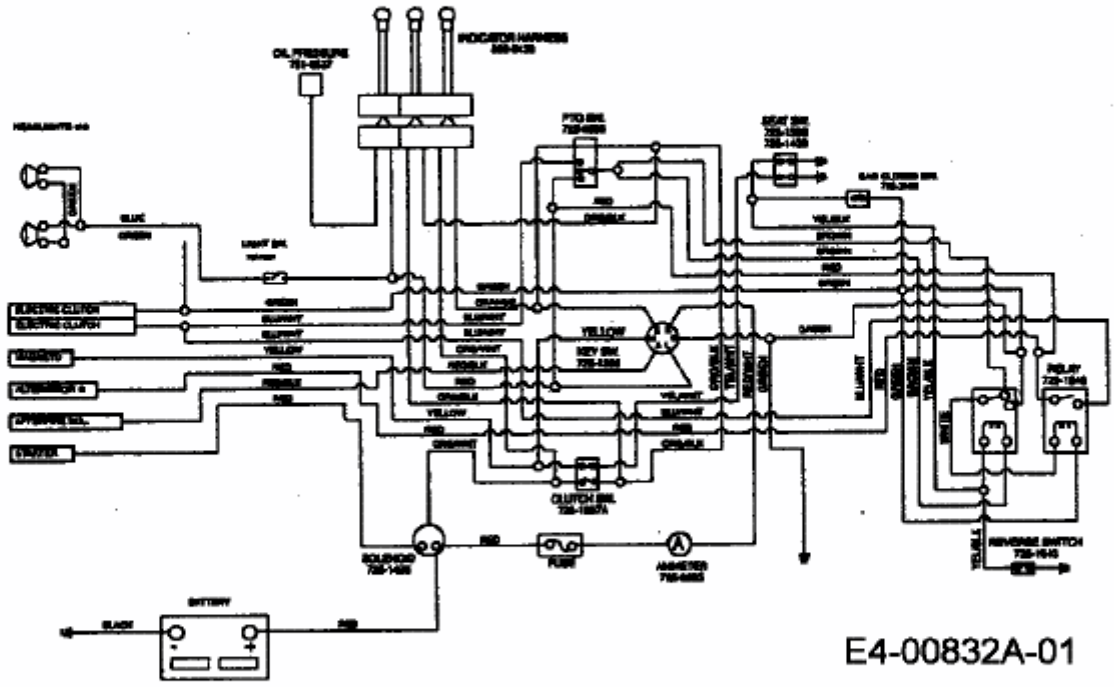Wire Harness (Electric PTO Only)