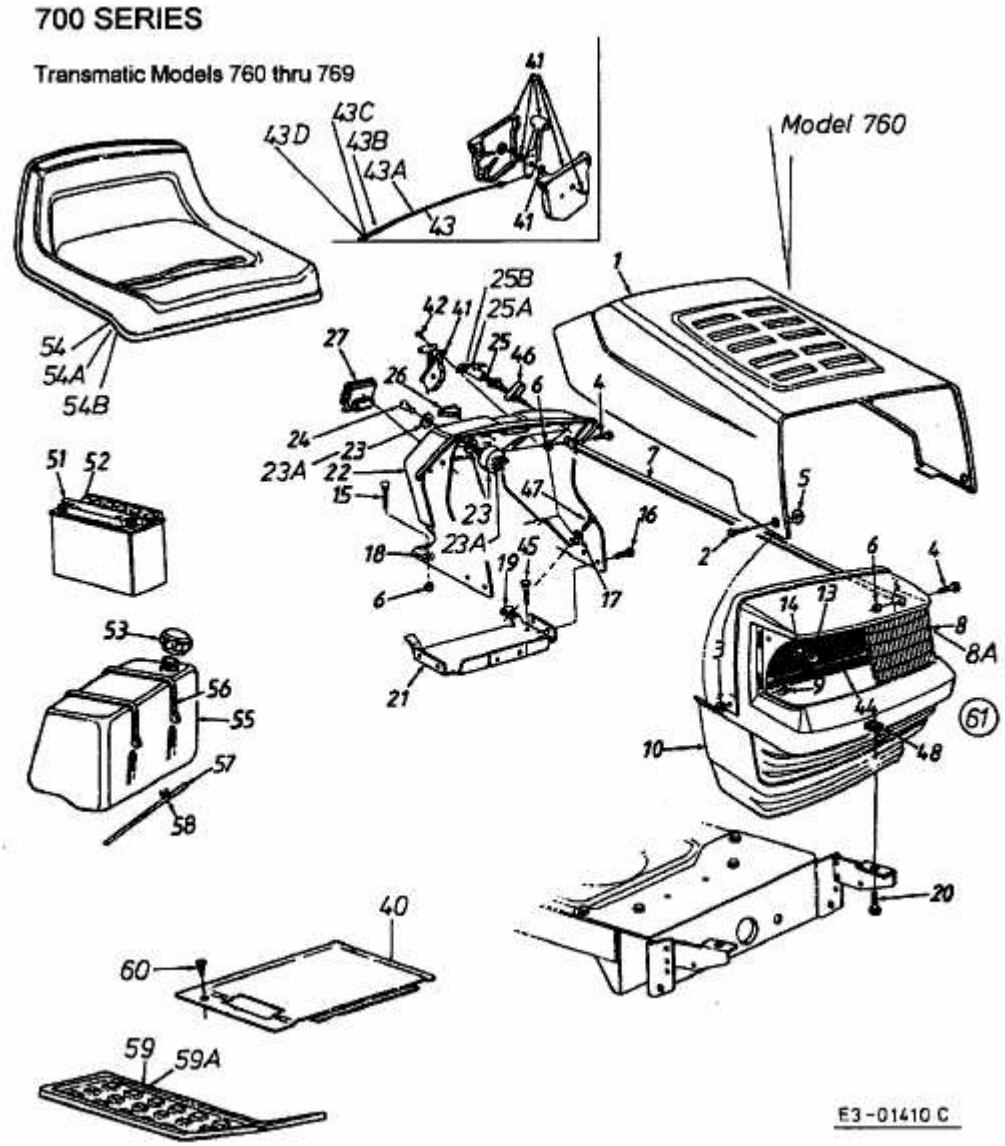SPRINT SLX 102 R > 13DP766N690 (2000) > MOTORHAUBE 0-STYLE