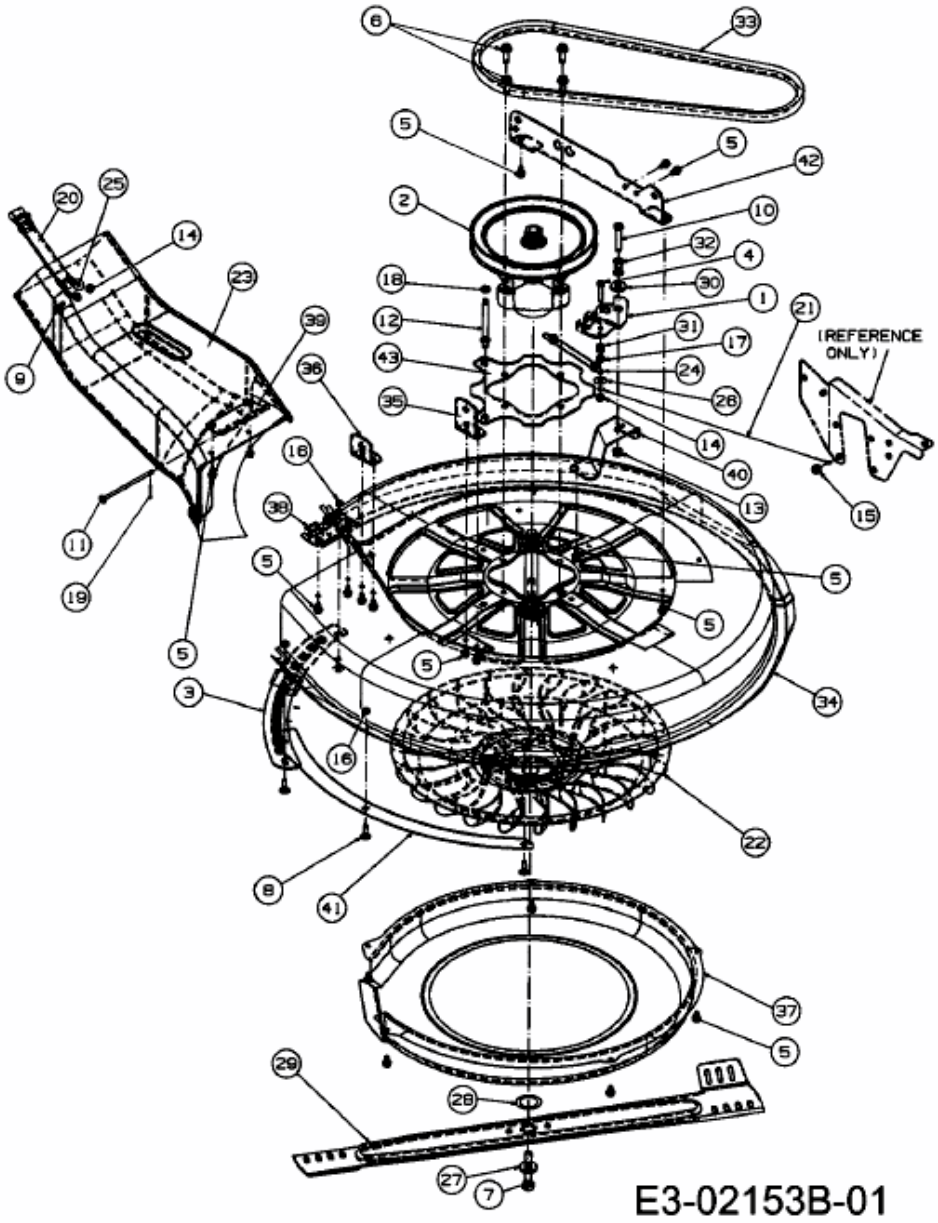SPIDER 76/145 > 13DM453C631 (2008) > MÄHWERK C (30"/76CM)