FORMULA 96 M > 13DH479F637 (2005) > MESSERSPINDEL 618-04241

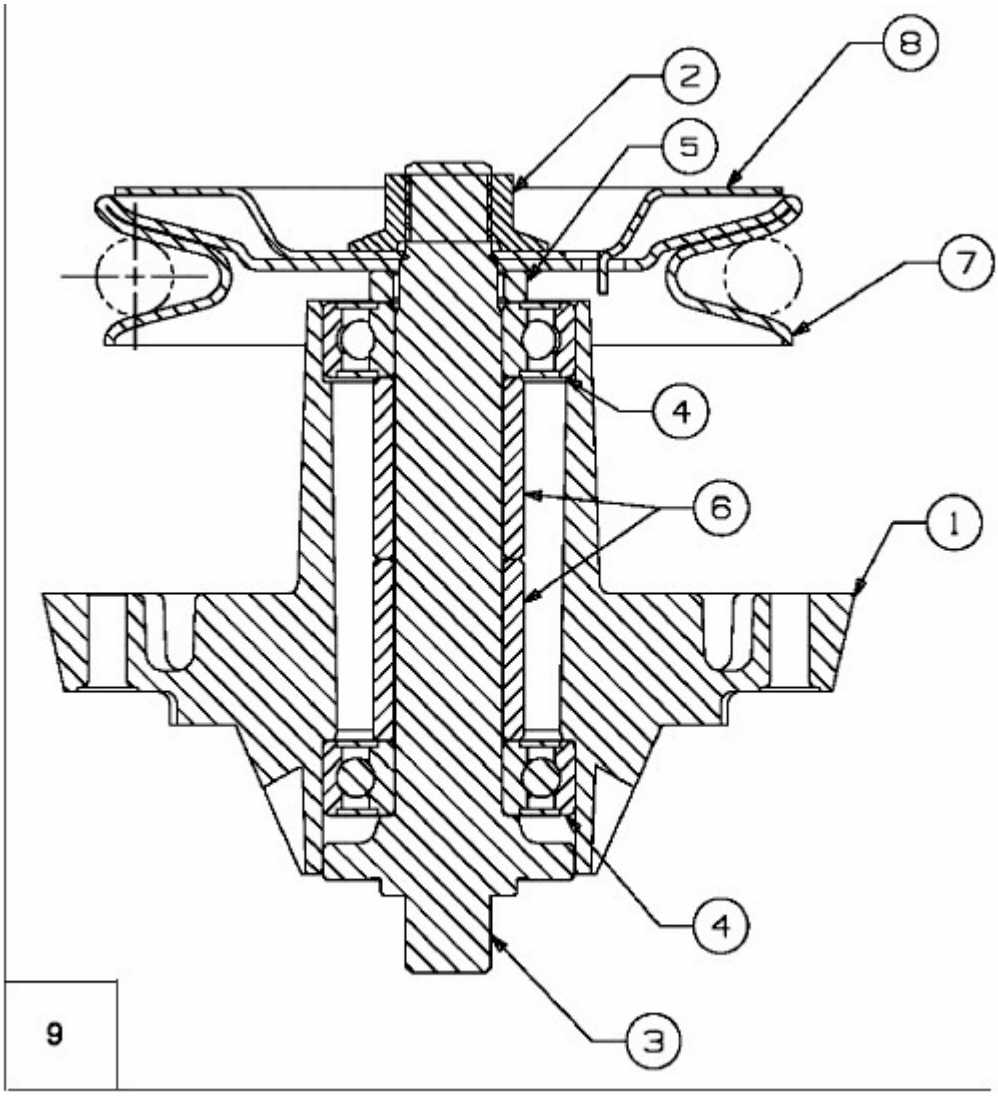

E3-03396A-01