SLX 76 R > 13DH476A490 (2006) > LENKUNG

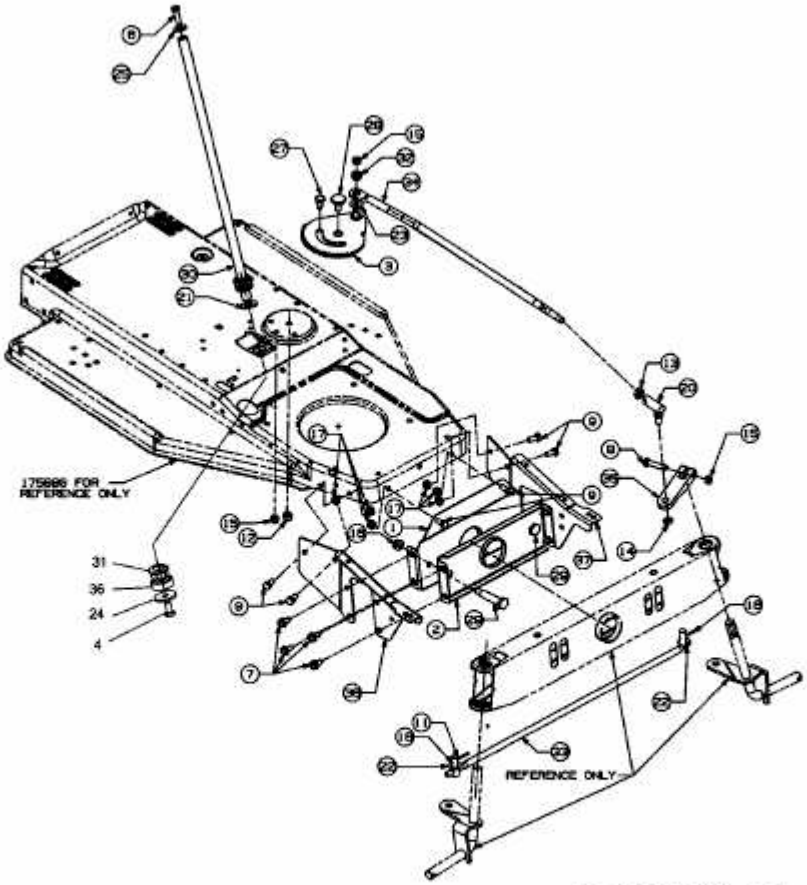

E3-02104A-01