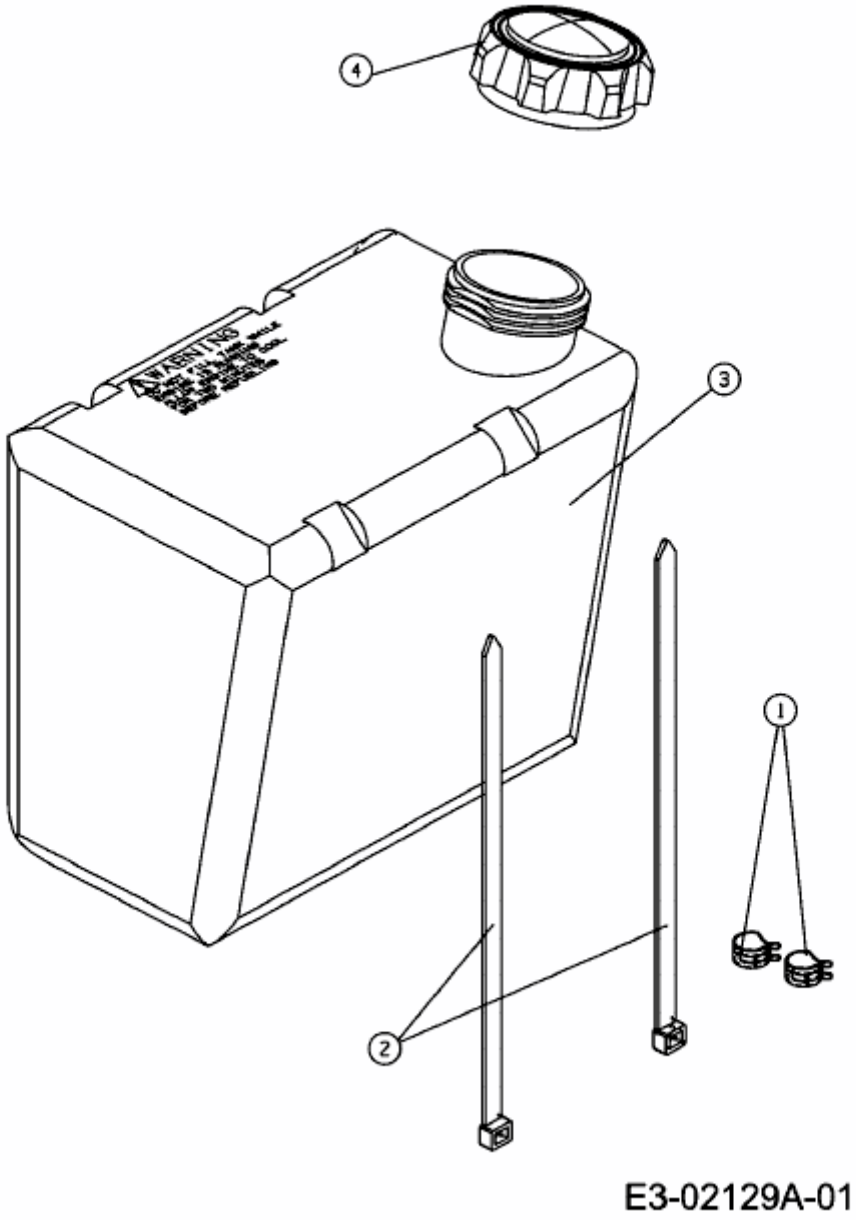603 > 13DH473C611 (2007) > TANK