13DH471C684 (2007) > MESSERSPINDEL 618-0139B

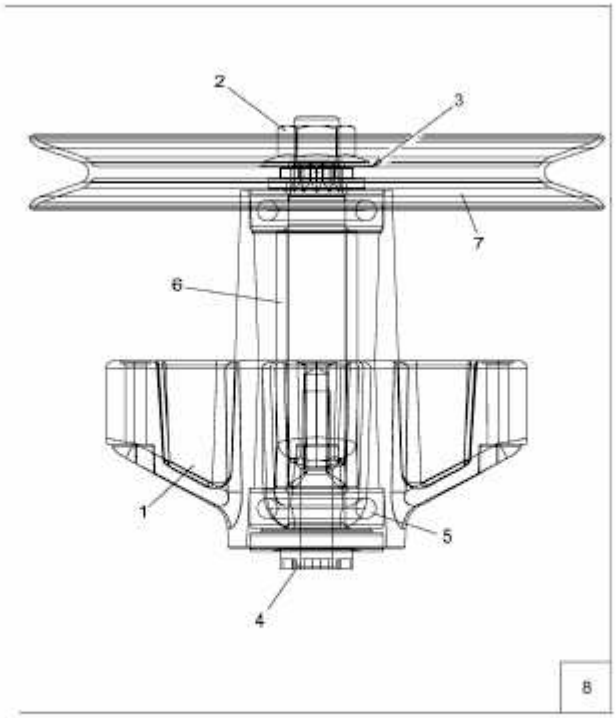

E3-01268B-01