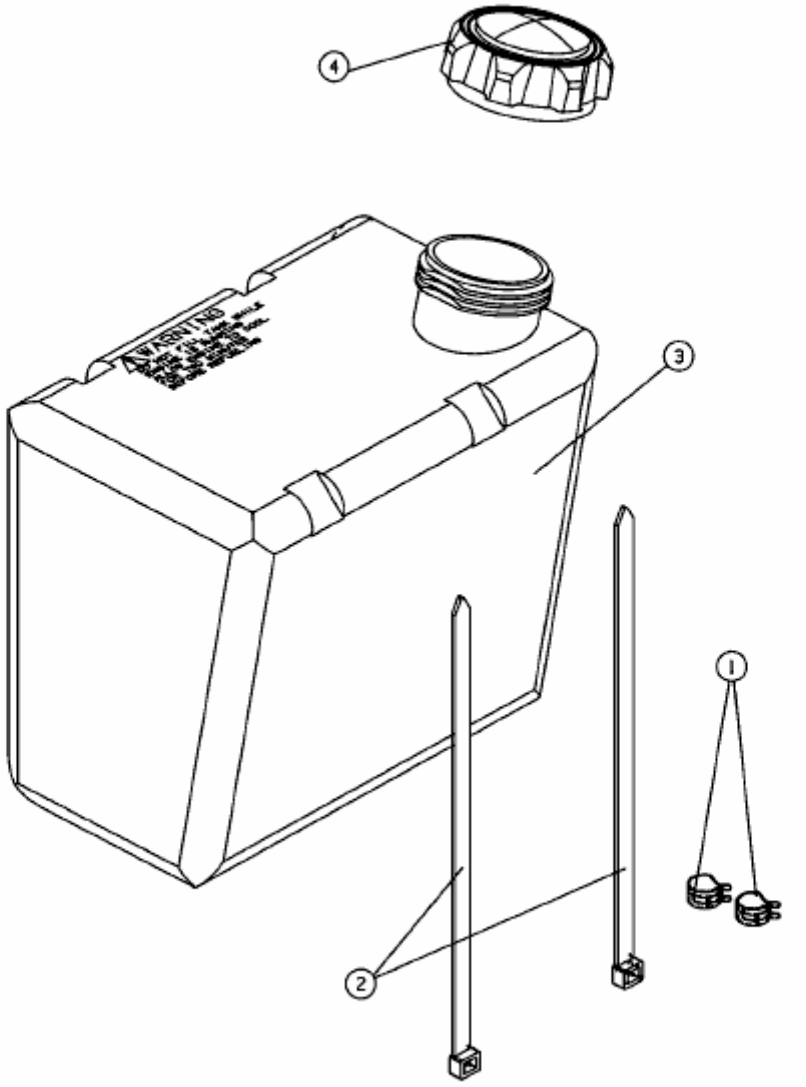RH 125/92 B > 13DH458E600 (2005) > TANK