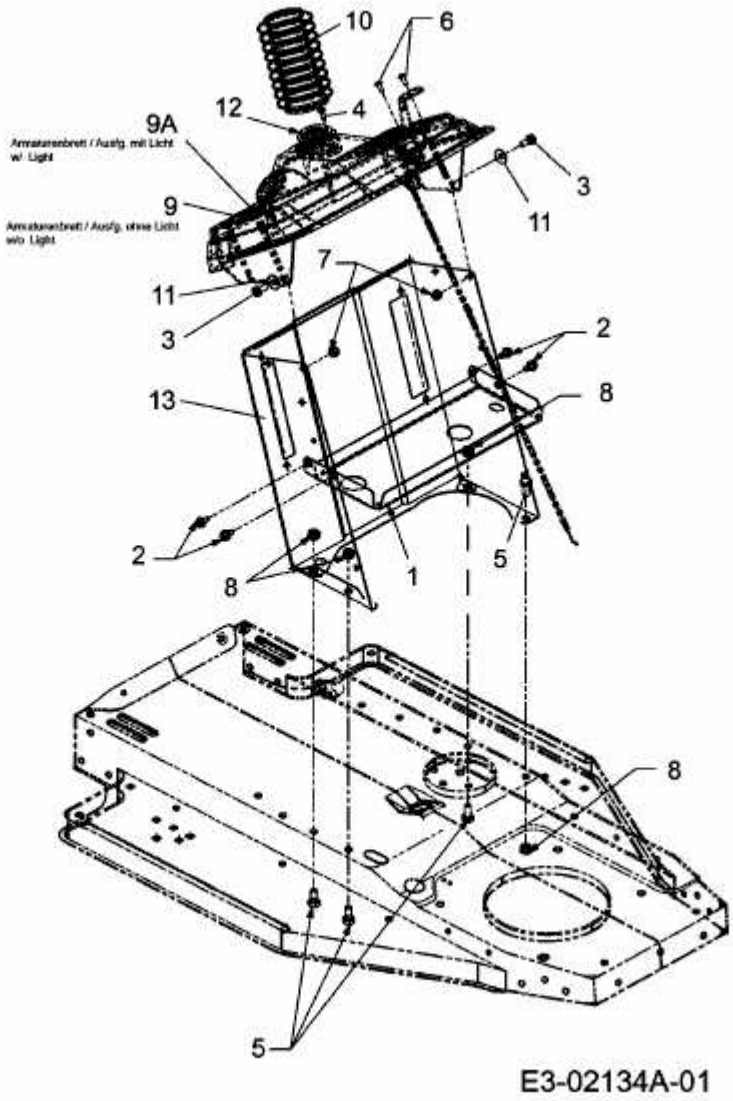SPIDER 92 RD > 13DH452E676 (2008) > ARMATURENBRETT