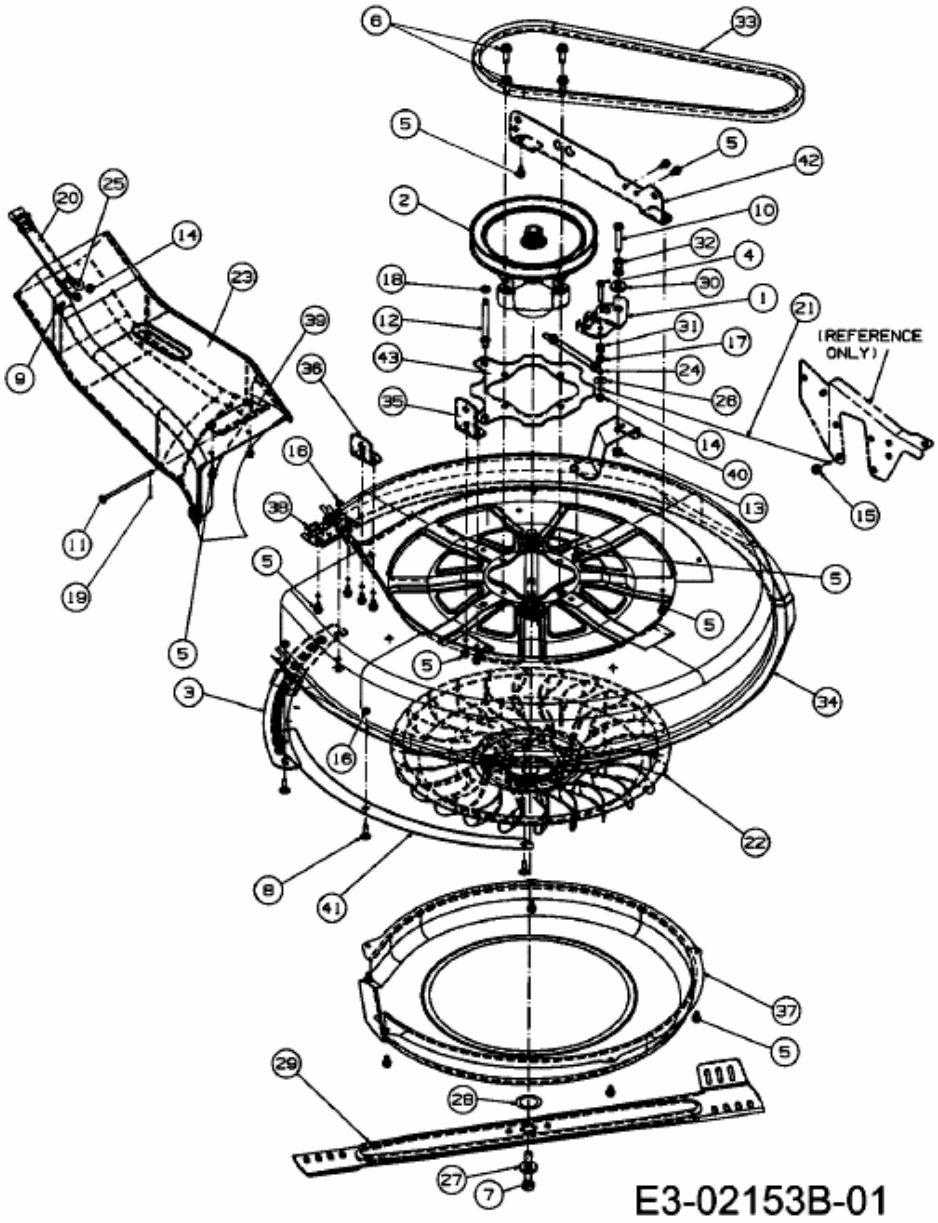SPIDER 76 RD > 13DH452C676 (2008) > MÄHWERK C (30"/76CM)