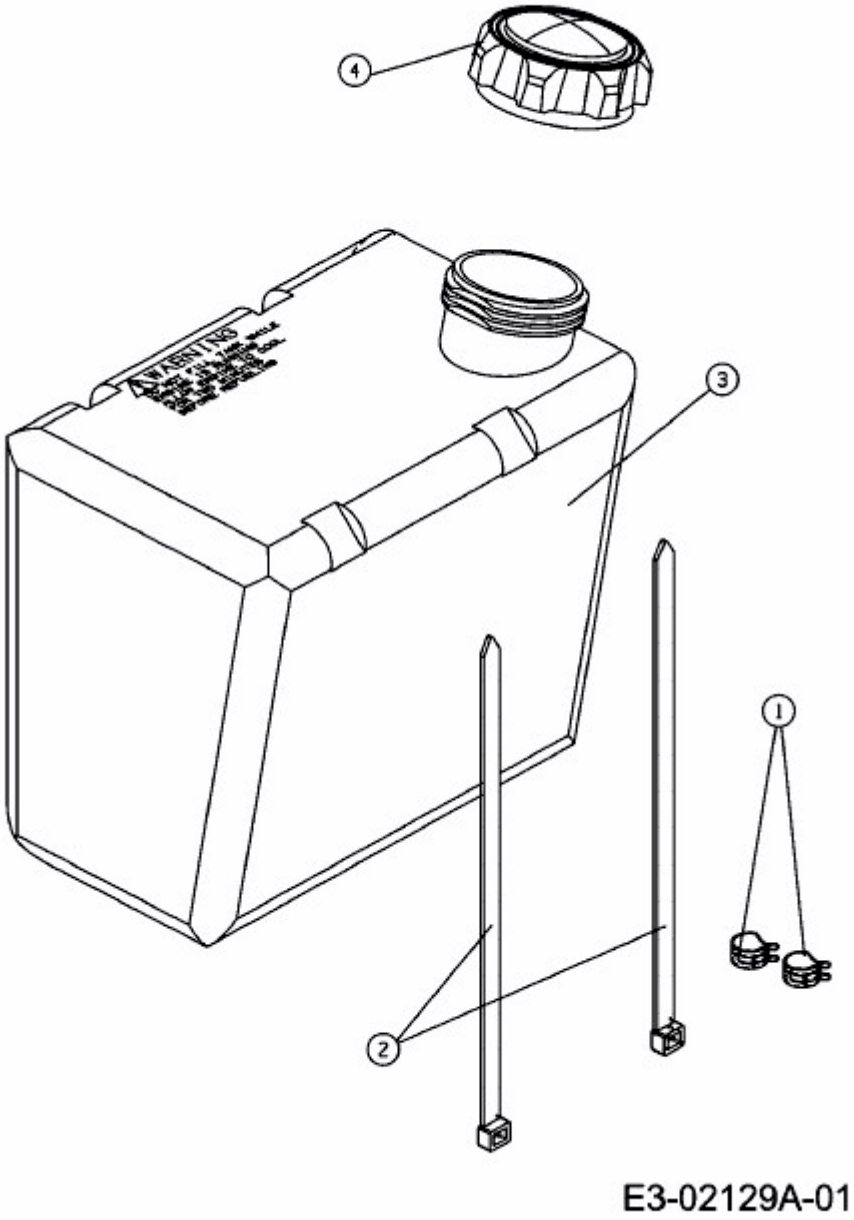RH 115/76 > 13DH452C610 (2005) > TANK