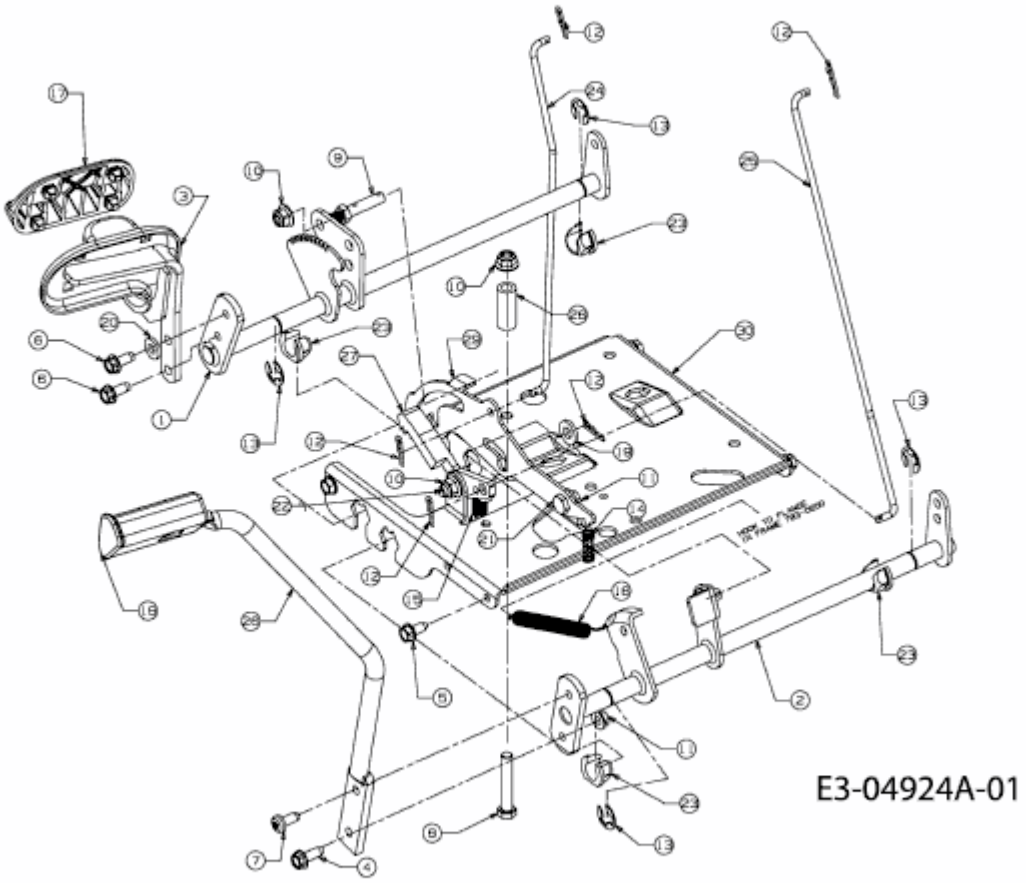GLX 92 RHLK > 13DG51GE690 (2011) > PEDALE