AE 5155 > 13DD50YE643 (2010) > PEDALE

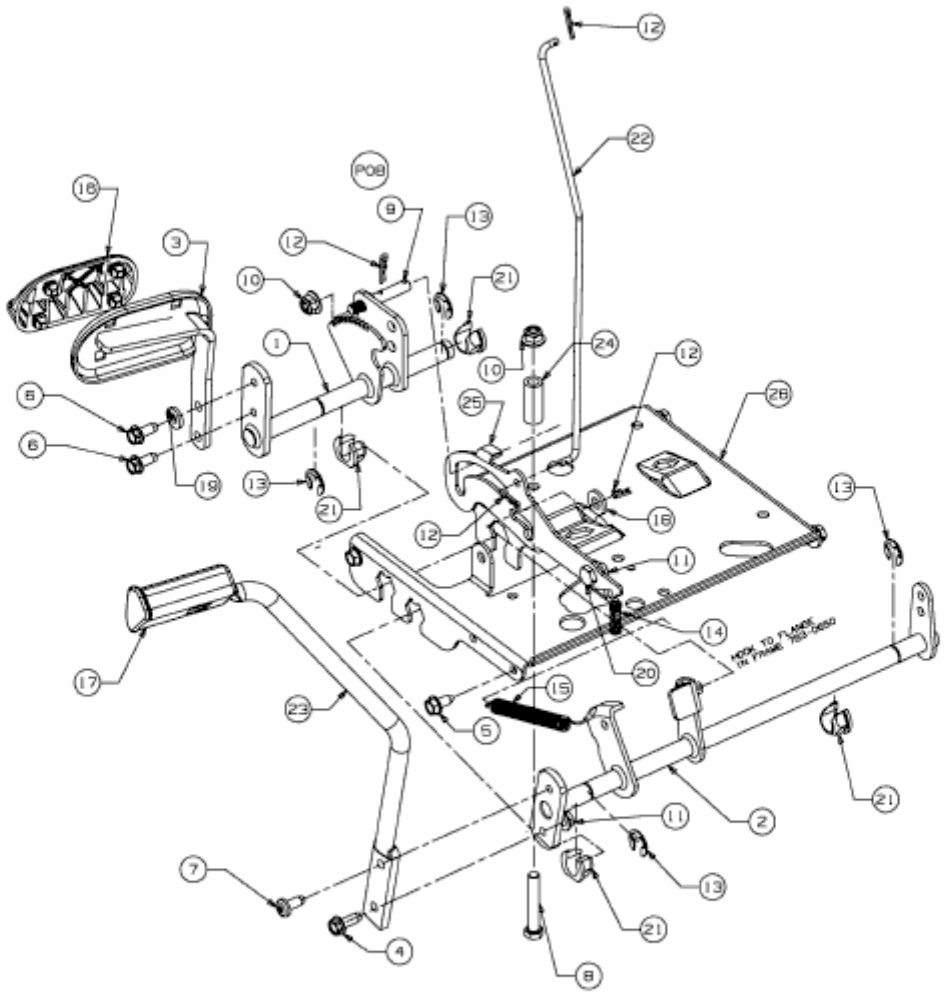

E3-02031D-01