MODEL 618-0167B
SINGLE SPEED TRANSAXLE - LH.

RIDER MODELS 760 THRU 769

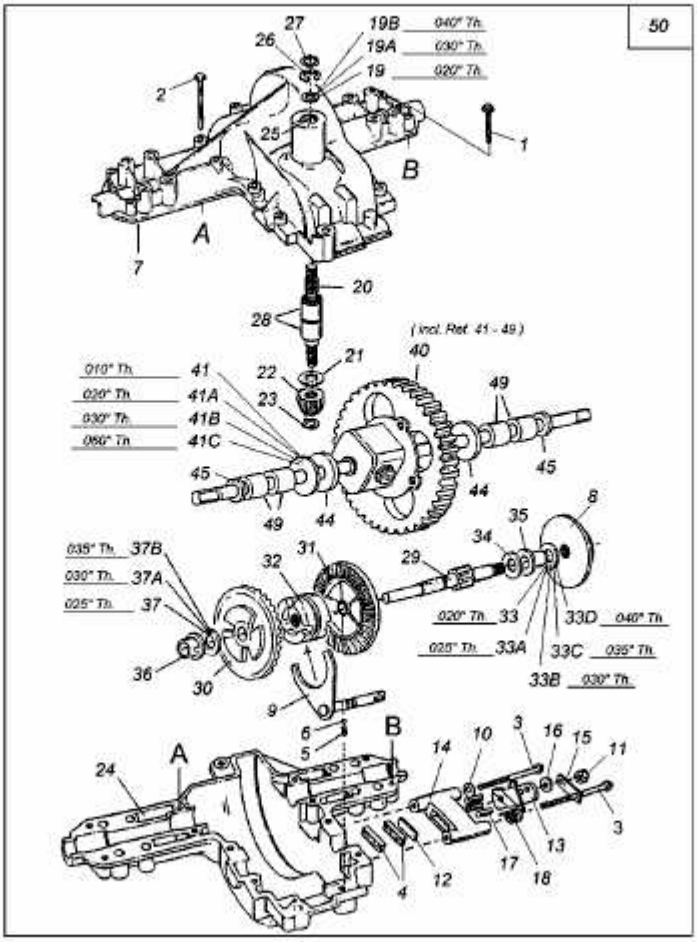

E3-01318A-01