RH 125 > 13D3760N600 (2001) > GASBEGRENZER

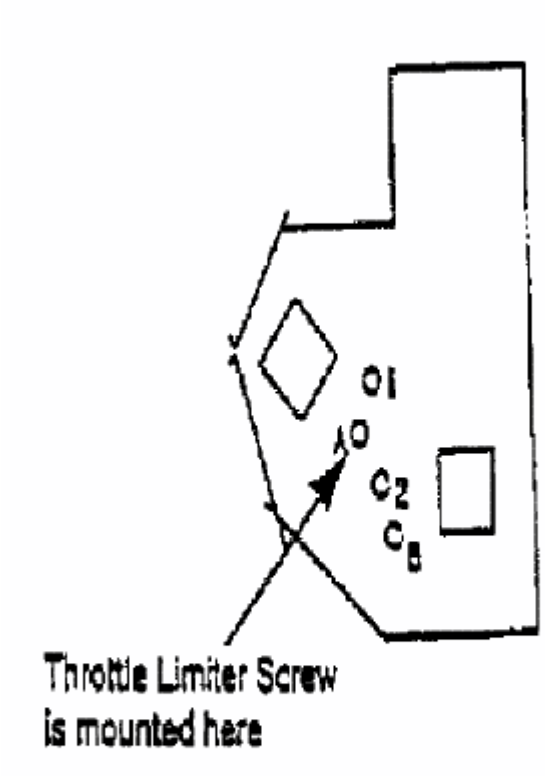

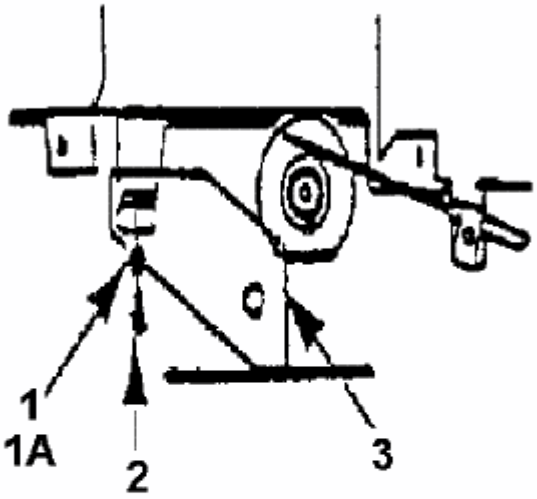

fsg