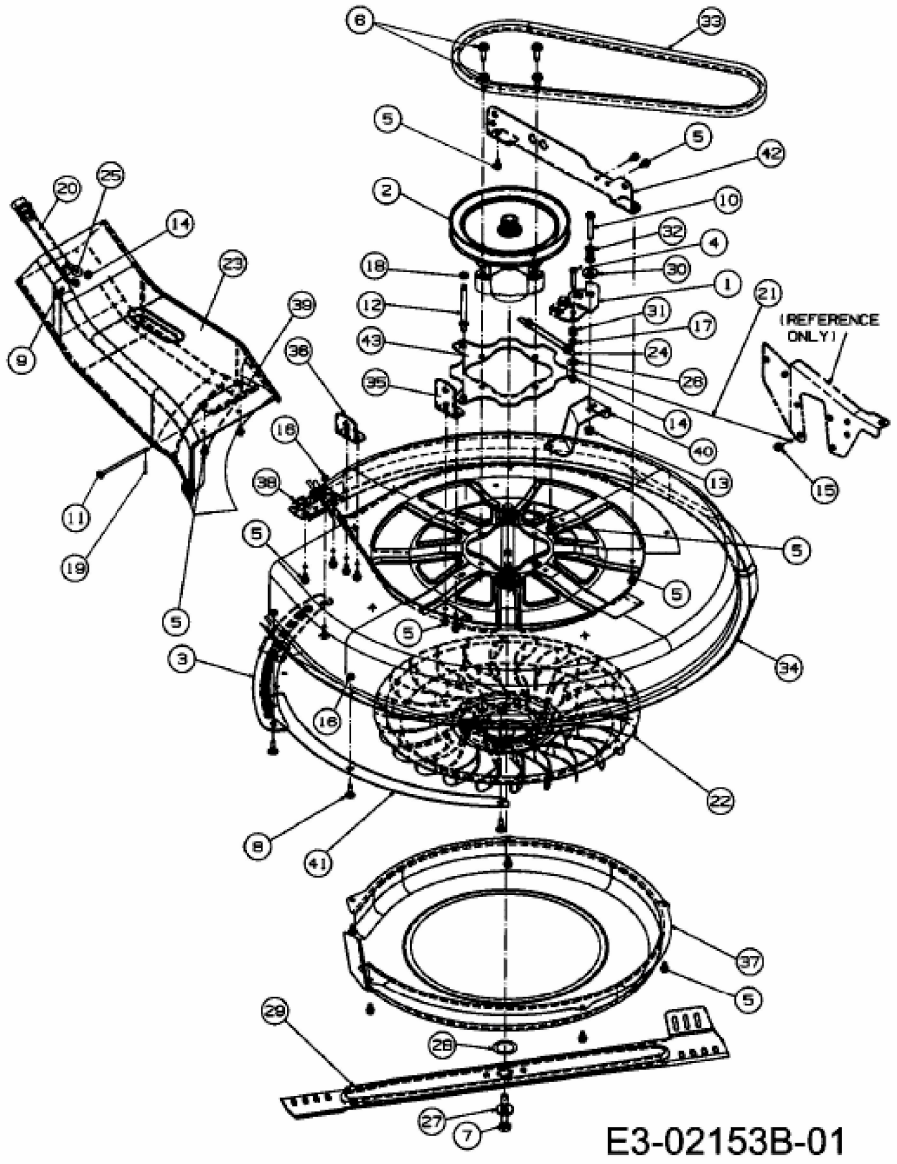SL-H 1152 > 13D1452C685 (2006) > MÄHWERK C (30"/76CM)