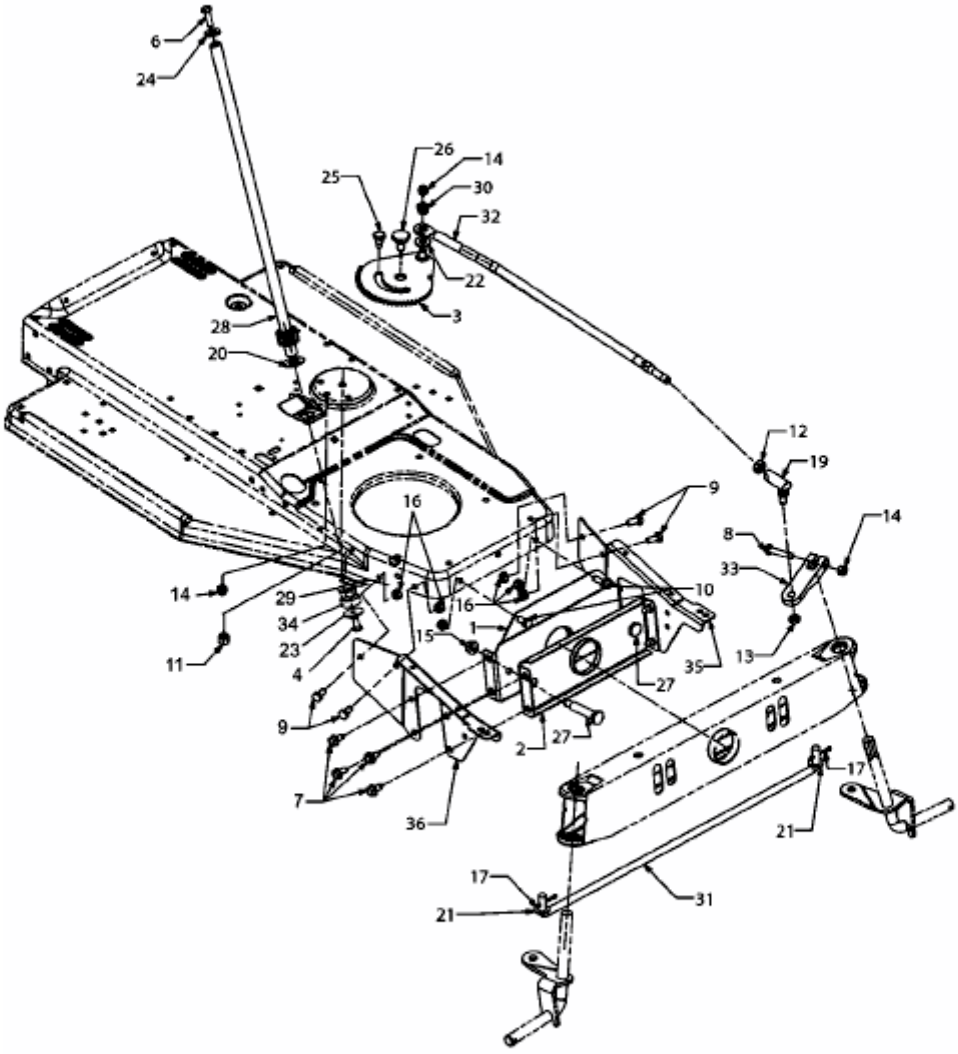RH 115/76 > 13D1452C670 (2007) > LENKUNG