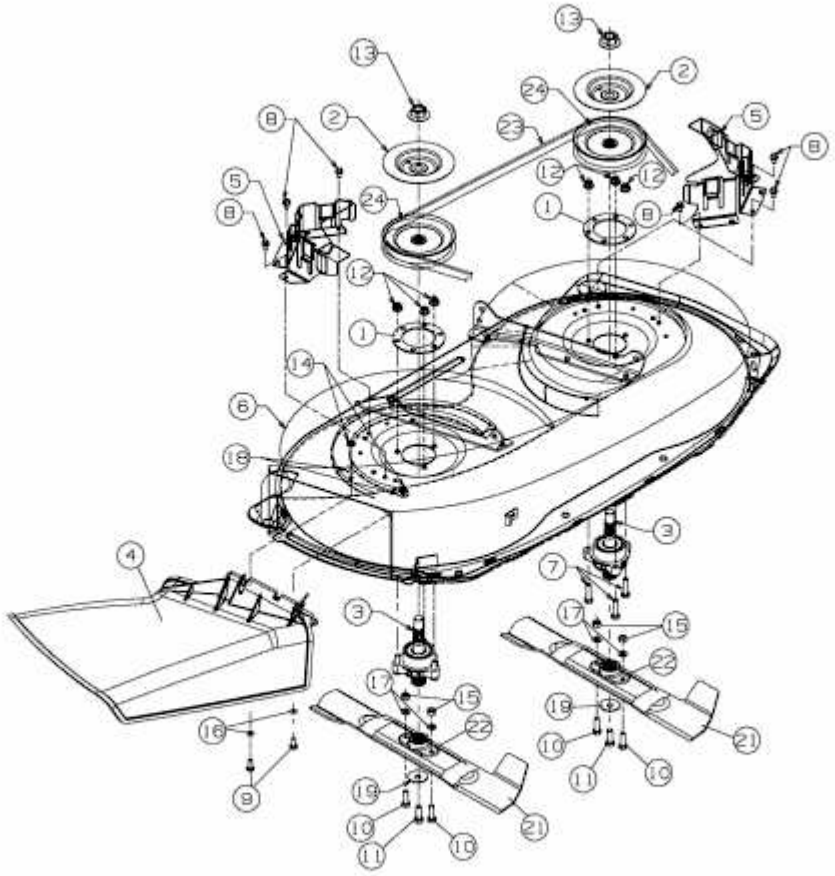SPIDER 91 SD > 13D1452B467 (2008) > MÄHWERK B (36"/91CM)