TRAC 12-91 > 13D1450B676 (2007) > LENKUNG

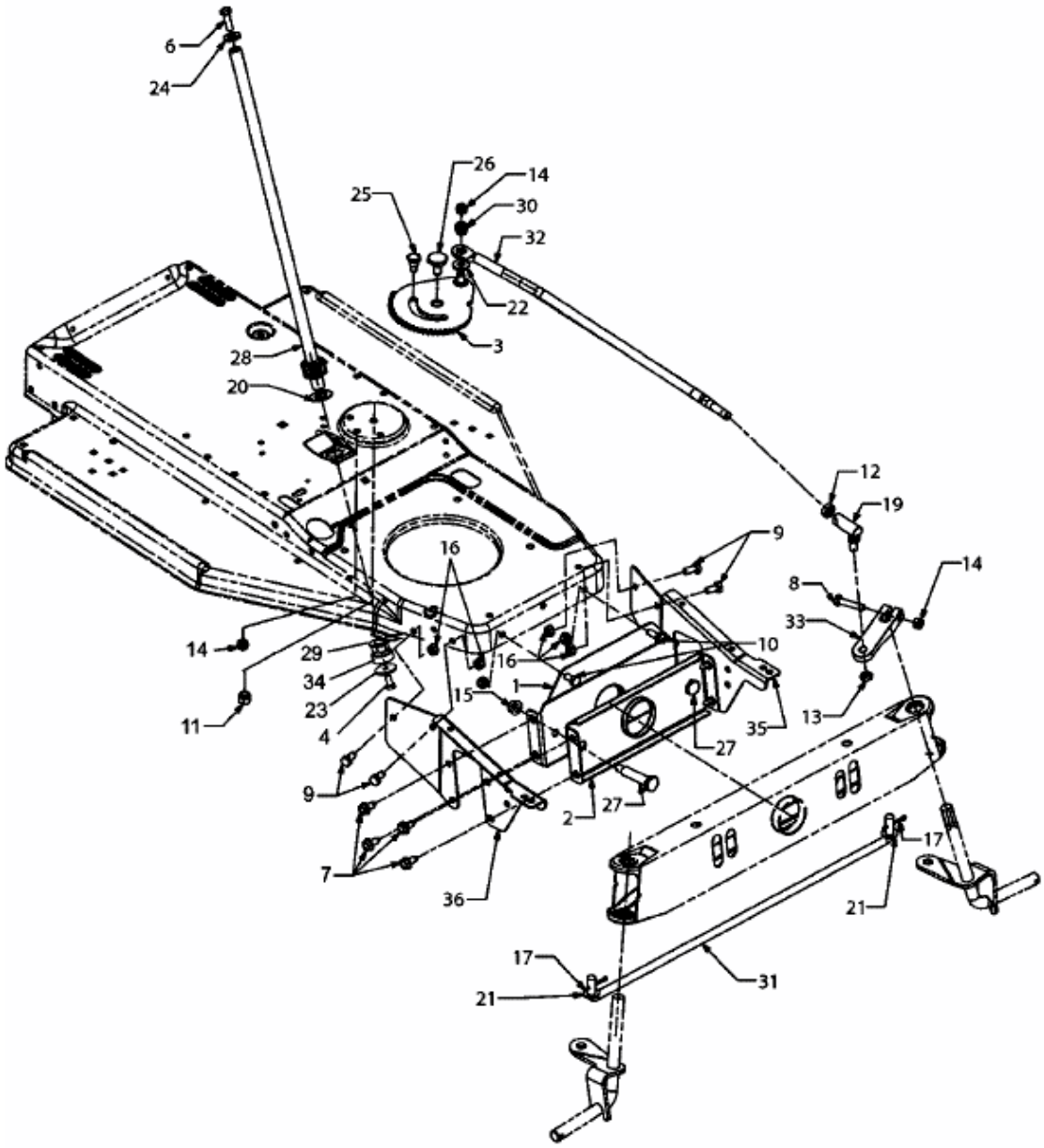

E3-02105A-01