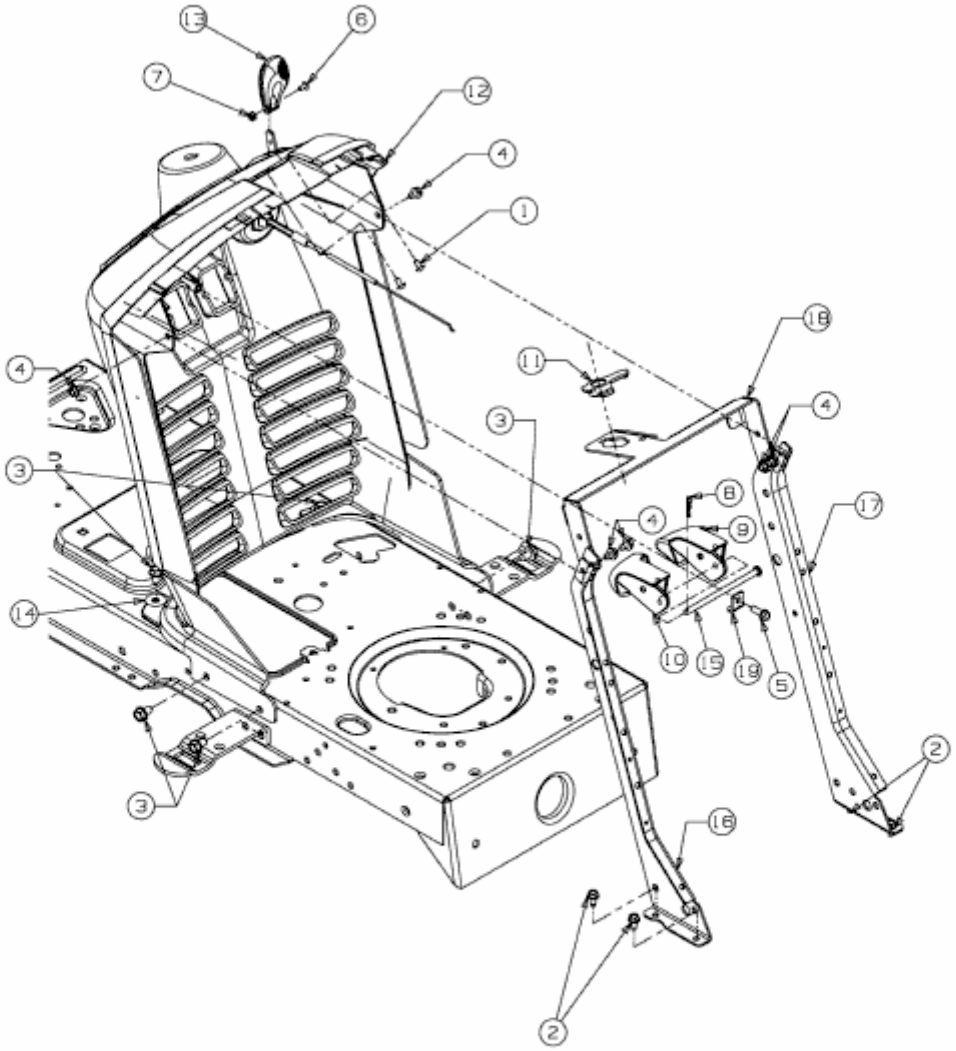MF 41-18 RD > 13CV51CN695 (2009) > ARMATURENBRETT