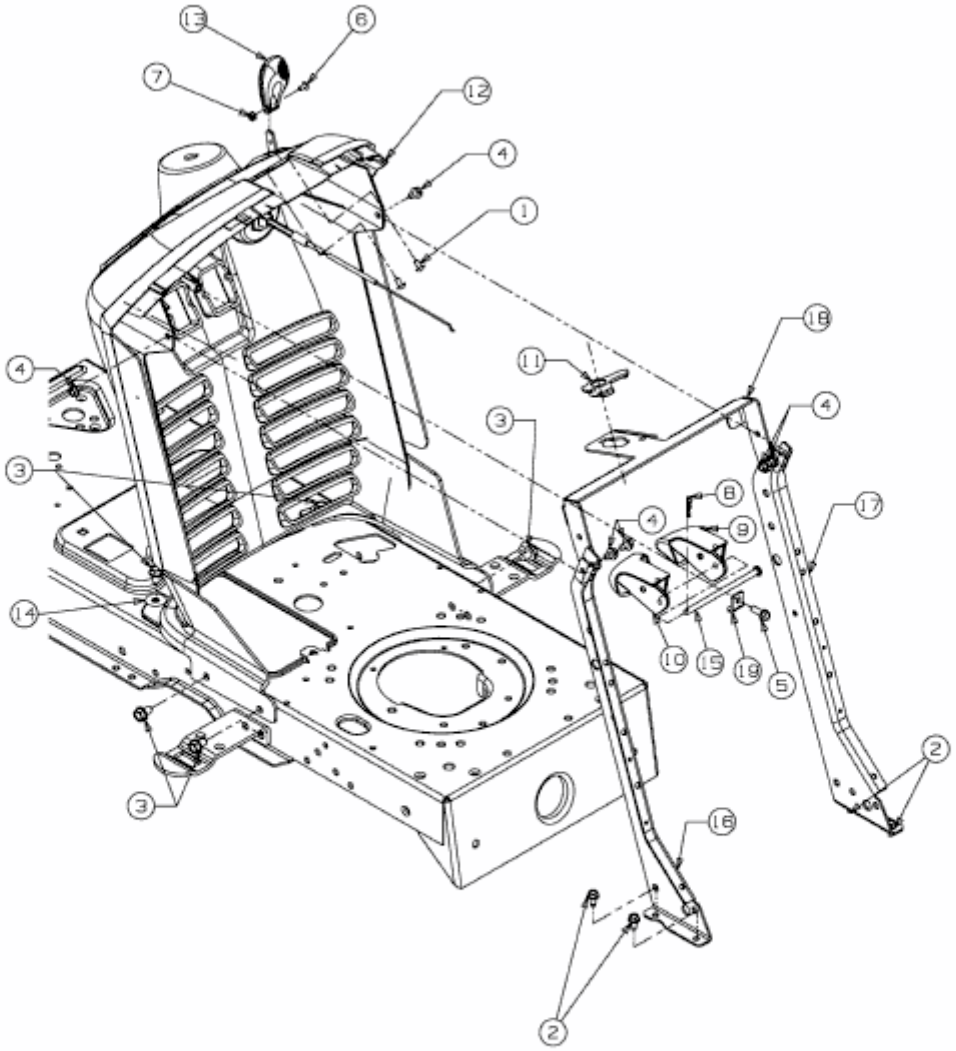MF 41-18 RD > 13CV51CN495 (2010) > ARMATURENBRETT