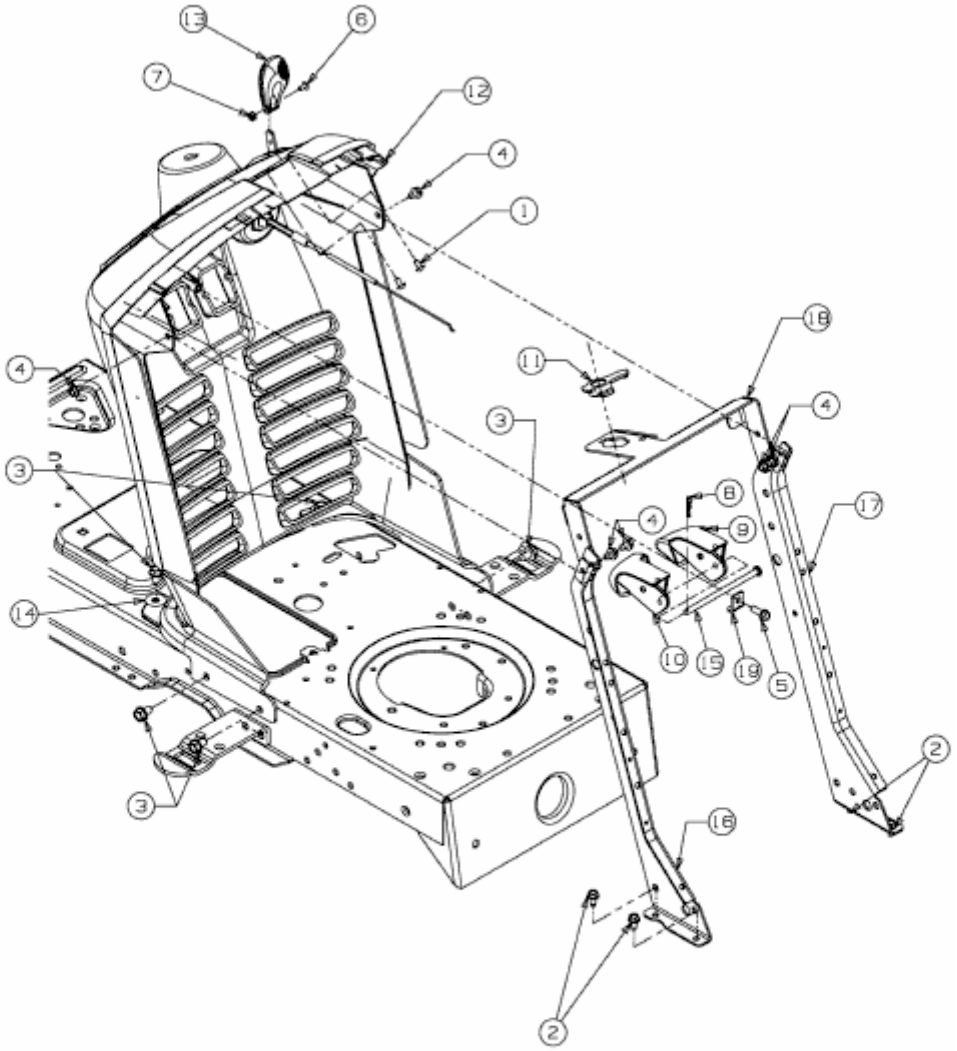MF 36-15 RD > 13CV51CE695 (2010) > ARMATURENBRETT