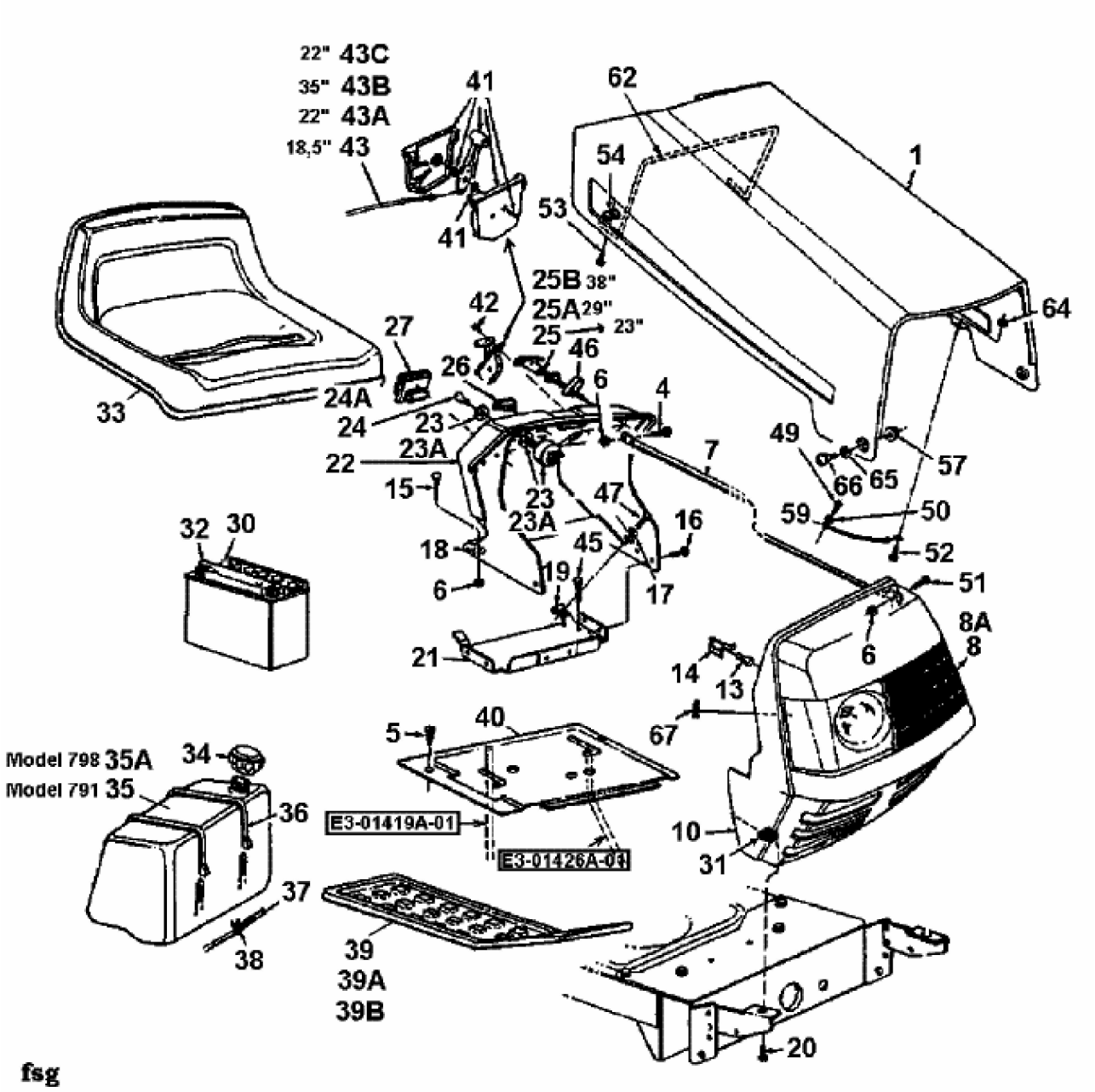EH/180 > 13CT796N679 (1999) > MOTORHAUBE 1-STYLE