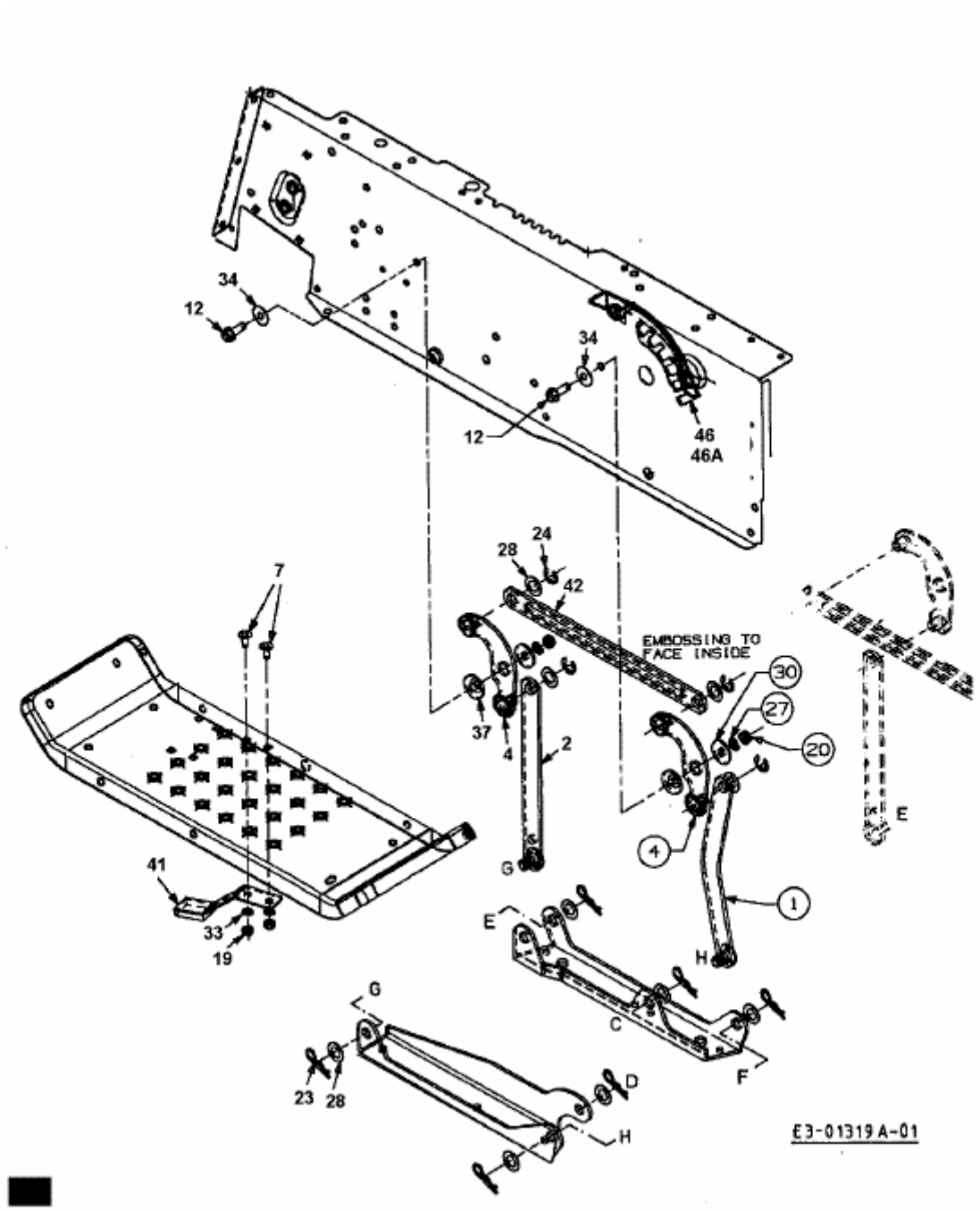
34
12
34
12
46
46A
24
28
42
7
EMBOSSING TO
FACE INSIDE
30
27
20
37
4
2
4
E
41
G
1
33
19
E
H
G
C
F
23
28
D
H
E3-01319A-01