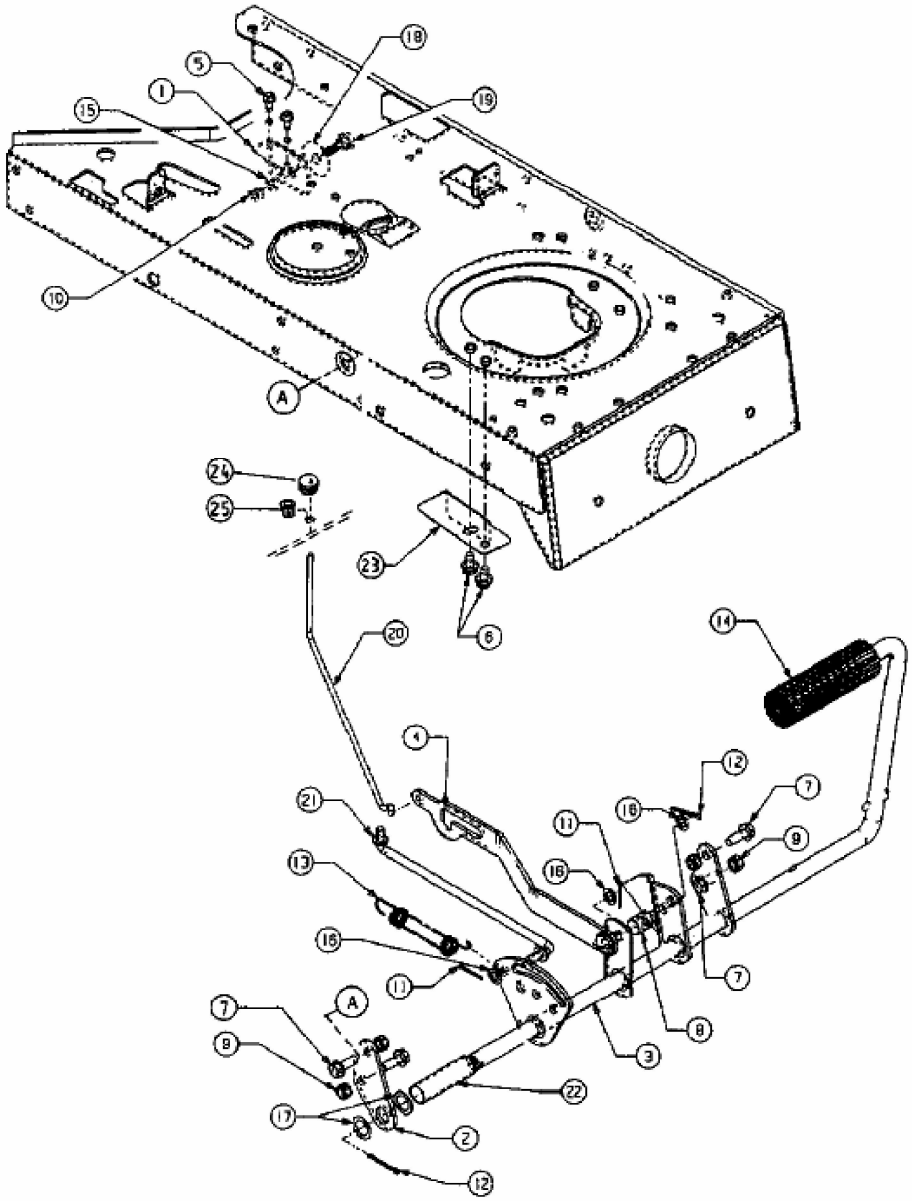RMH 18-102 H > 13CT793N628 (1999) > PEDALE