TN 7145 > 13CP764N643 (1999) > PEDALE
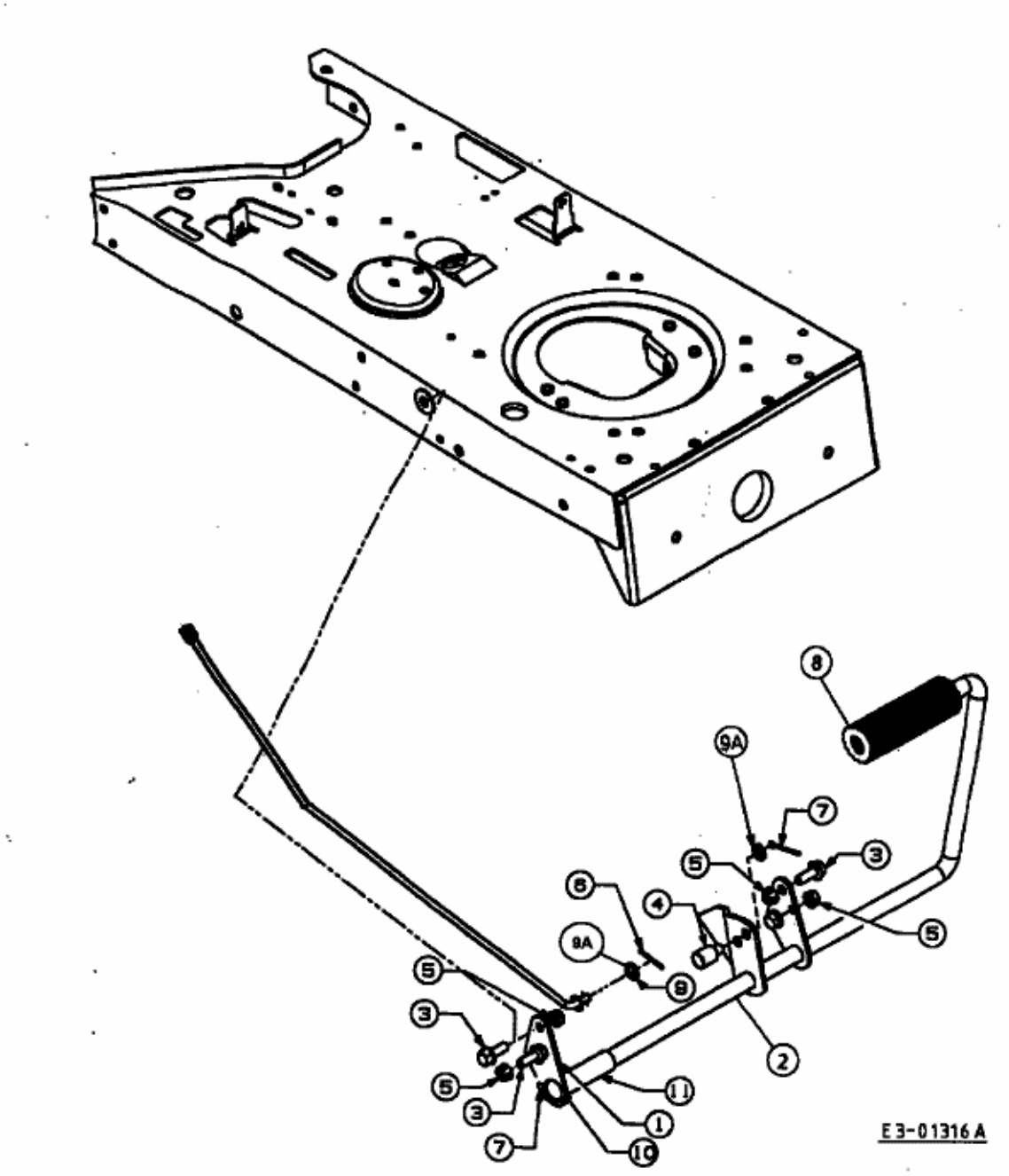
Models 760 thru 769