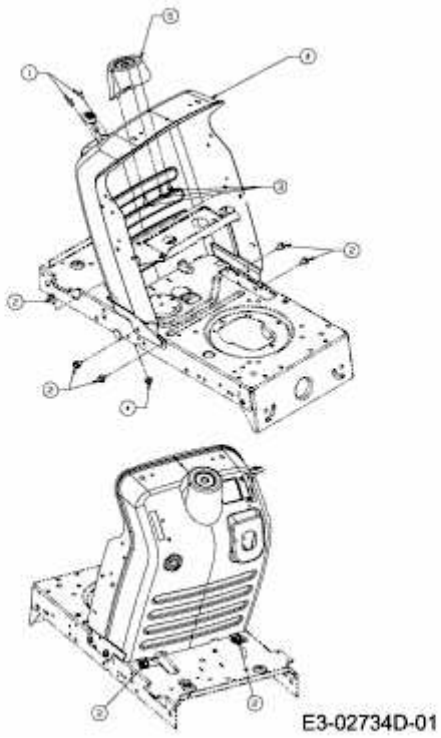BL 155/96 T > 13CM768F683 (2011) > ARMATURENBRETT