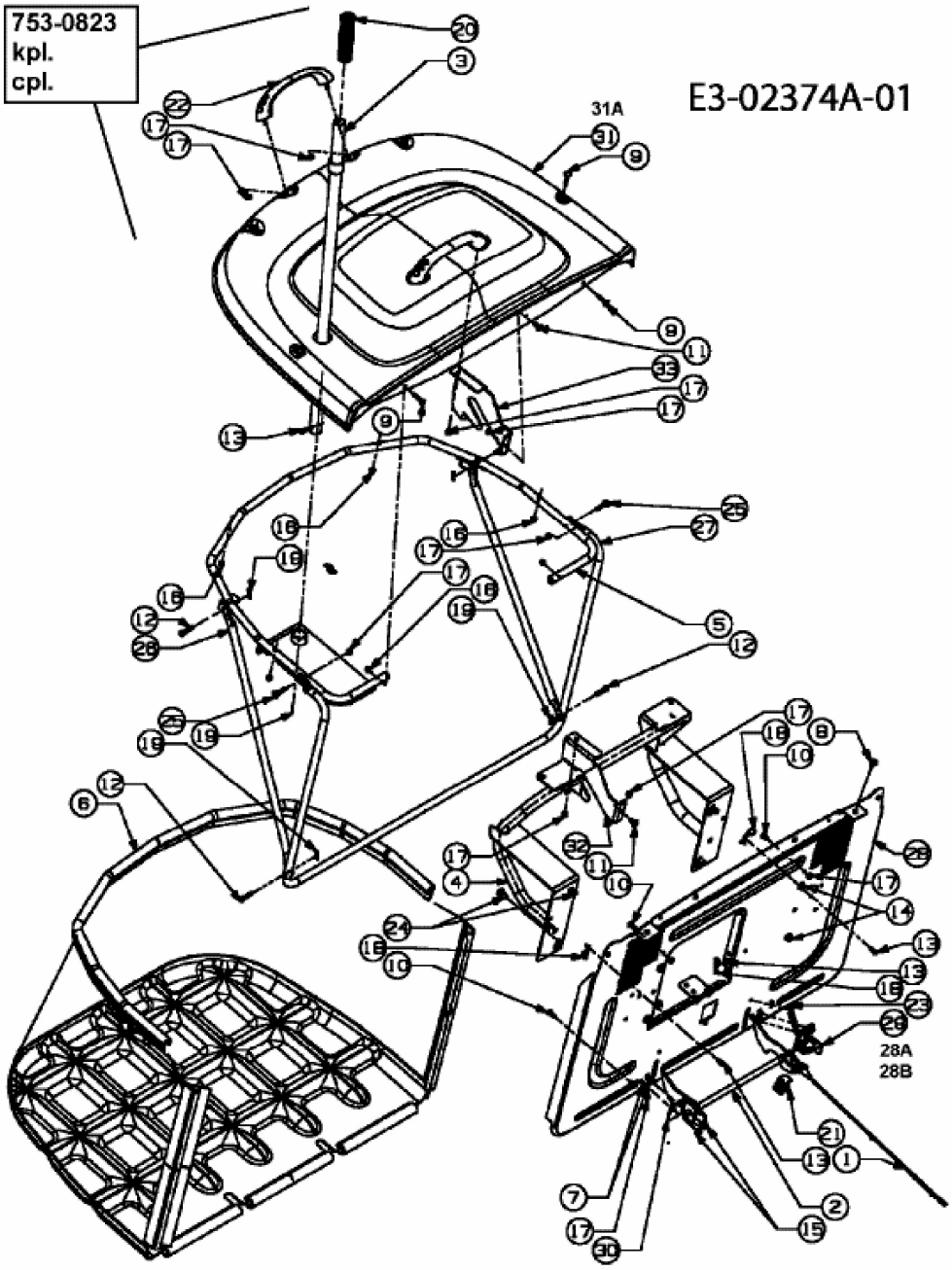RMH 514-92 A > 13CM507E628 (2005) > GRASFANGVORRICHTUNG