AE 5135 > 13CM504E643 (2005) > PEDALE

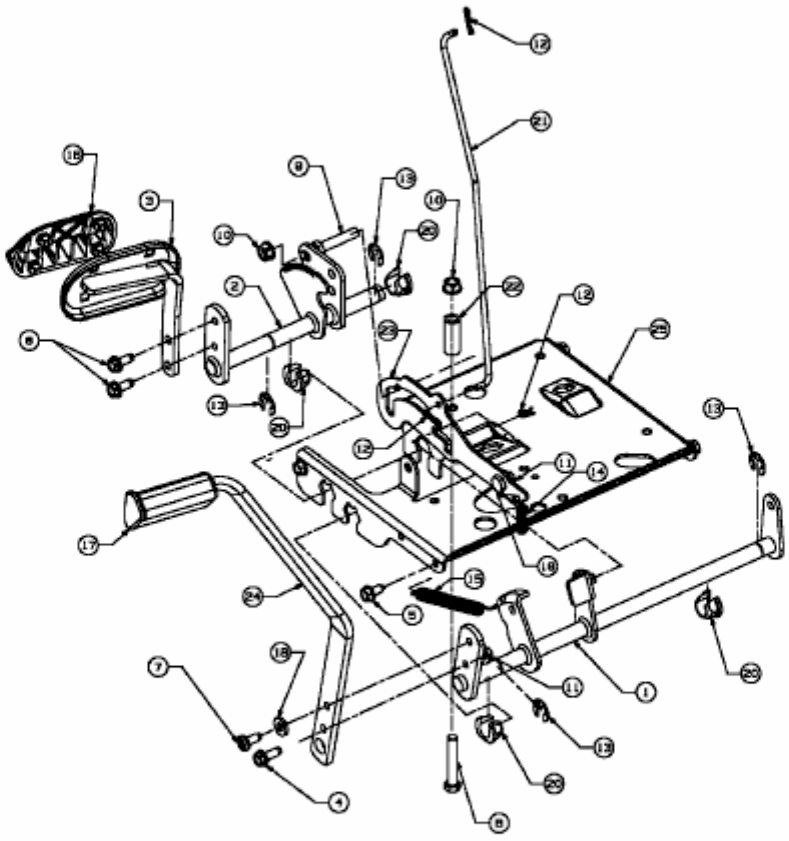

E3-02031A-01