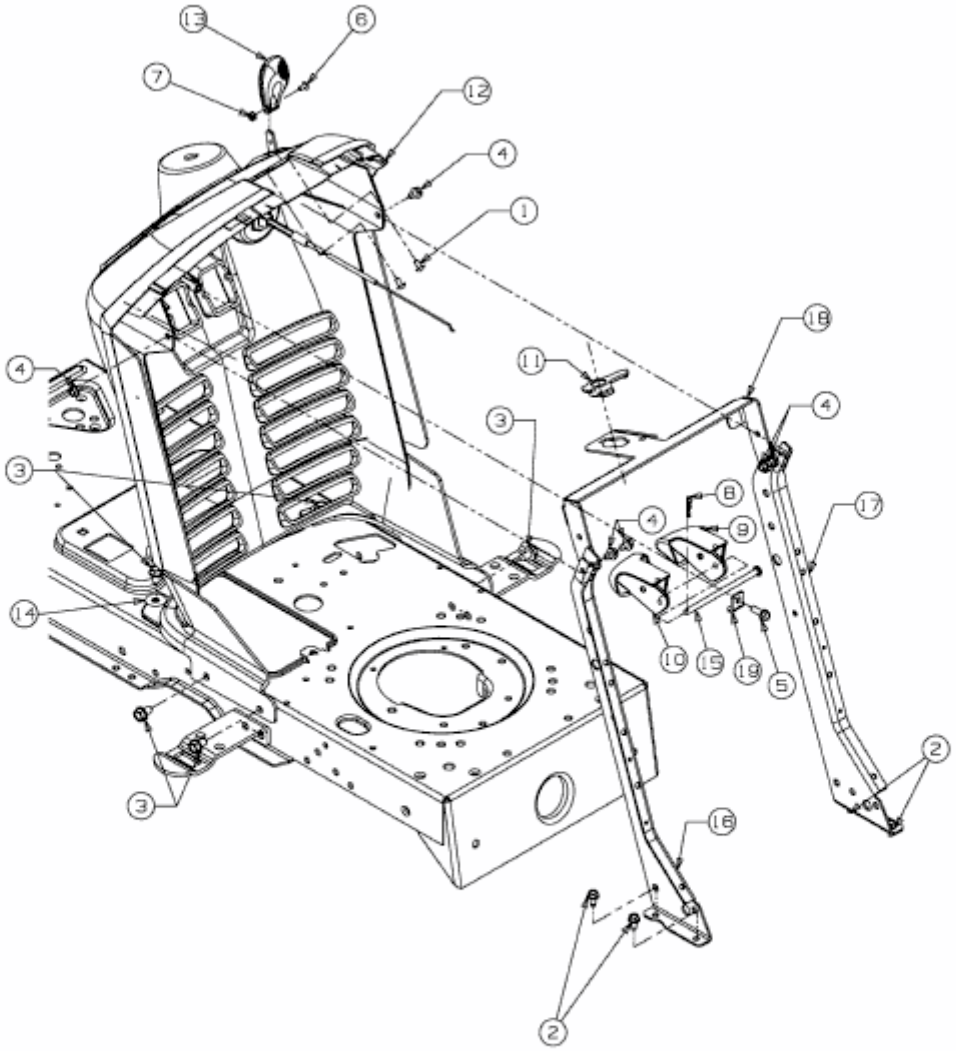MF 41-25 RD > 13CI51CN695 (2009) > ARMATURENBRETT