CC 1024 RD-J > 13CI51AJ403 (2011) > PEDALE

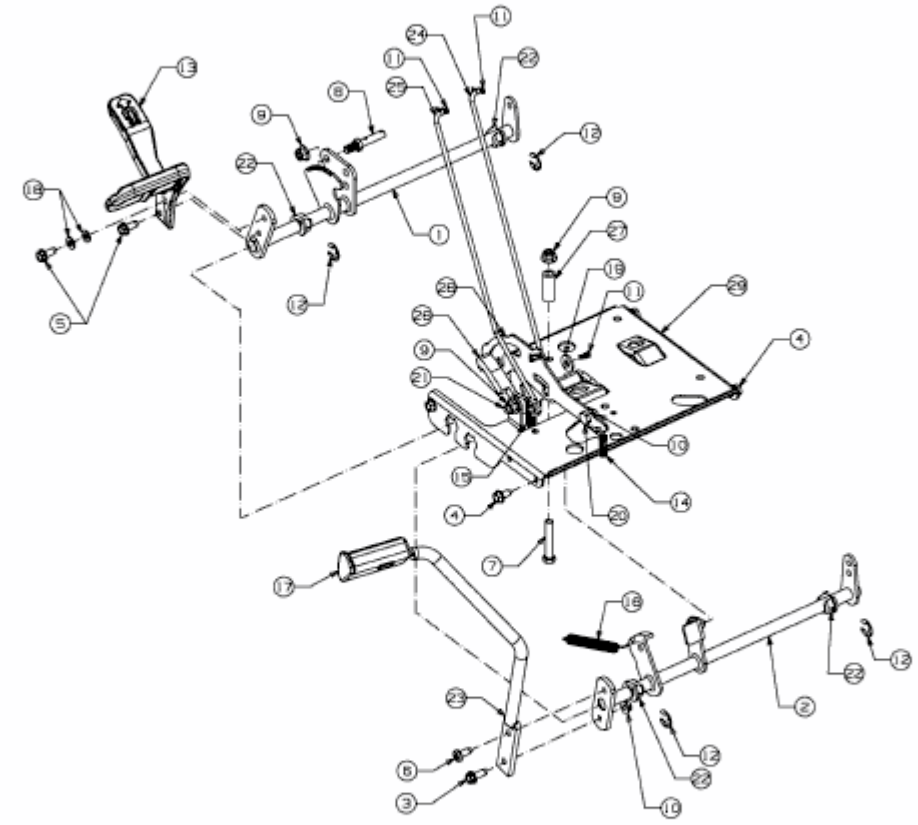

E3-05427A-01