GLX 92 RHLK > 13CI516E690 (2005) > PEDALE

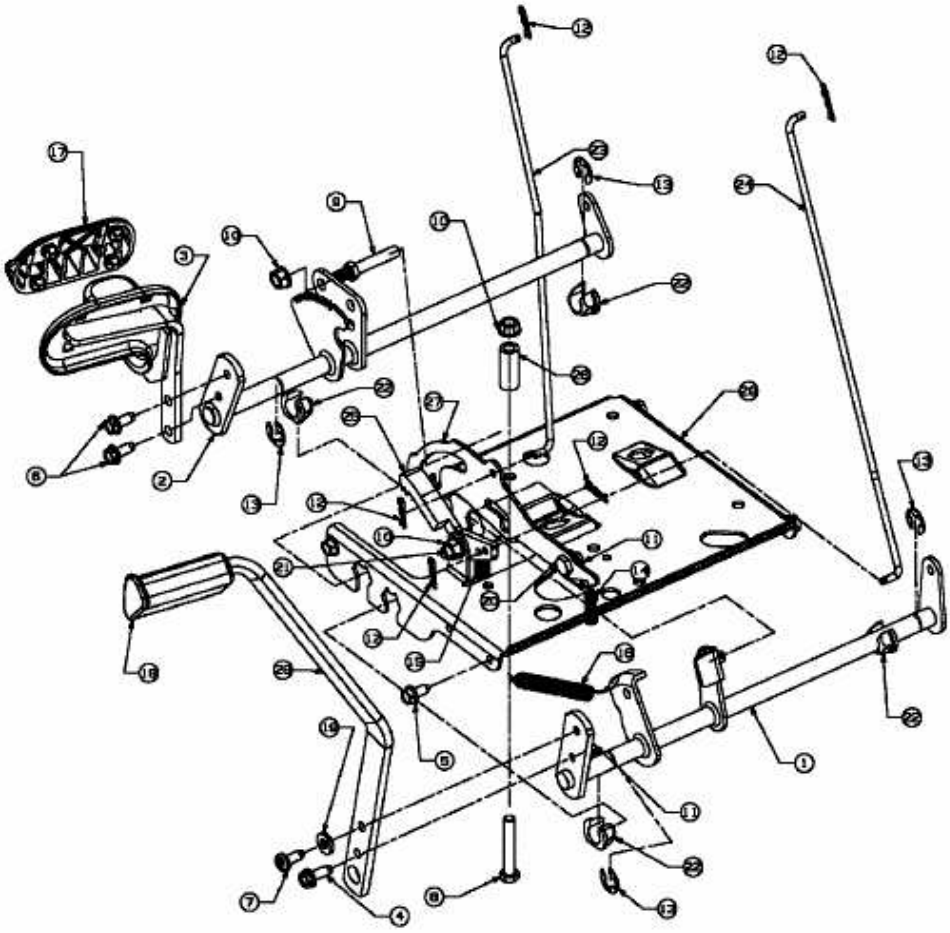

E3-02032A-01