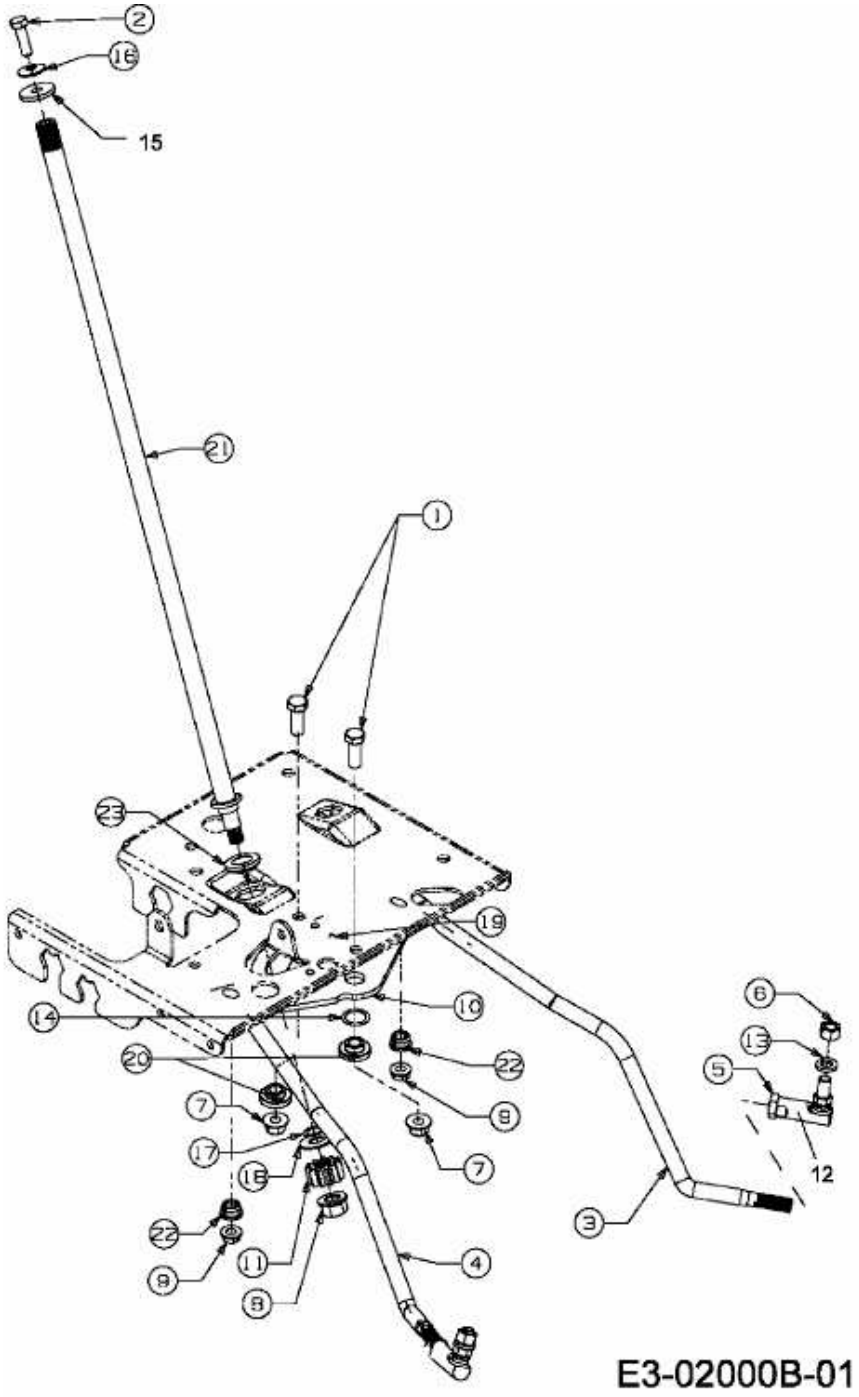HE 5150 K > 13CI514E643 (2007) > LENKUNG