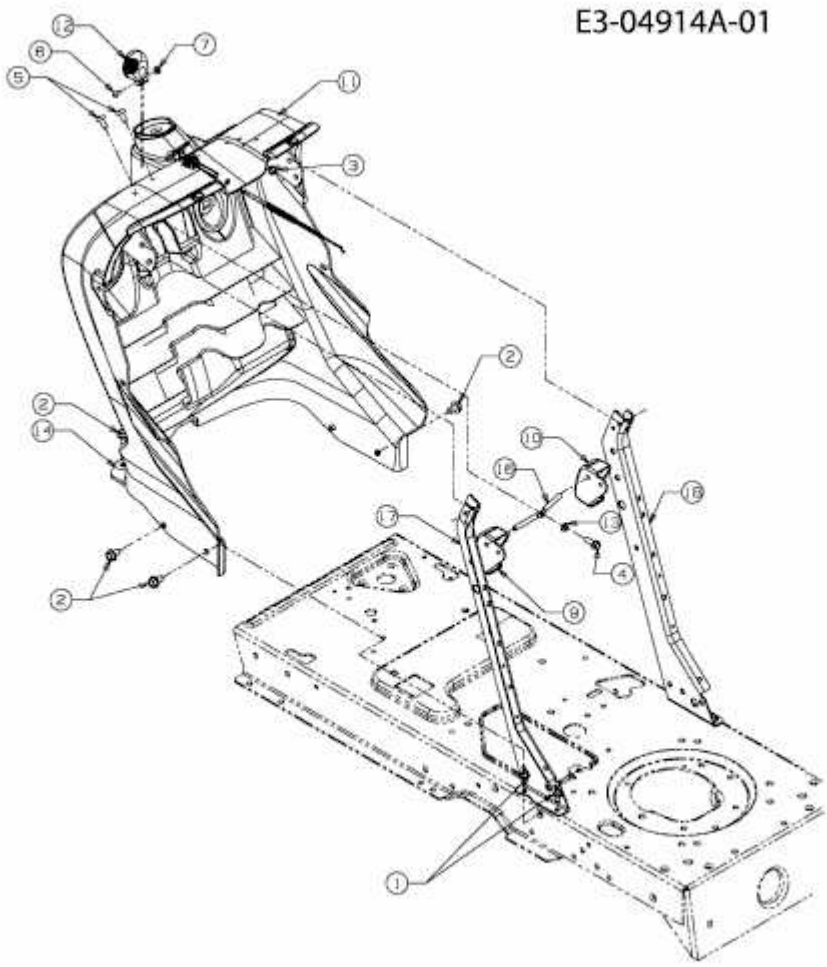25/105 H > 13CI513N686 (2009) > ARMATURENBRETT