HE 5135 > 13CH514E643 (2005) > ARMATURENBRETT

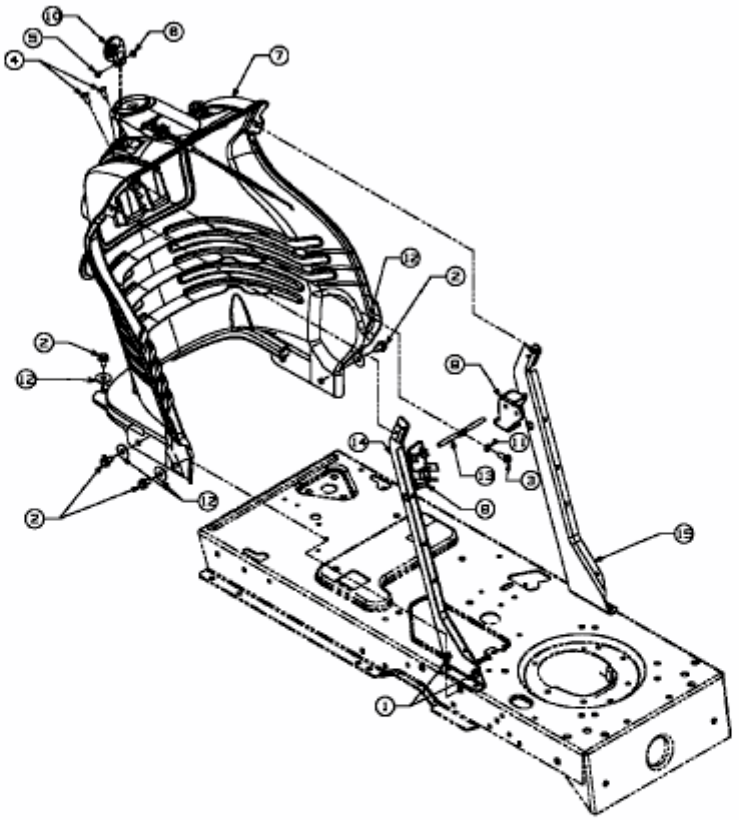

E3-02067A-01