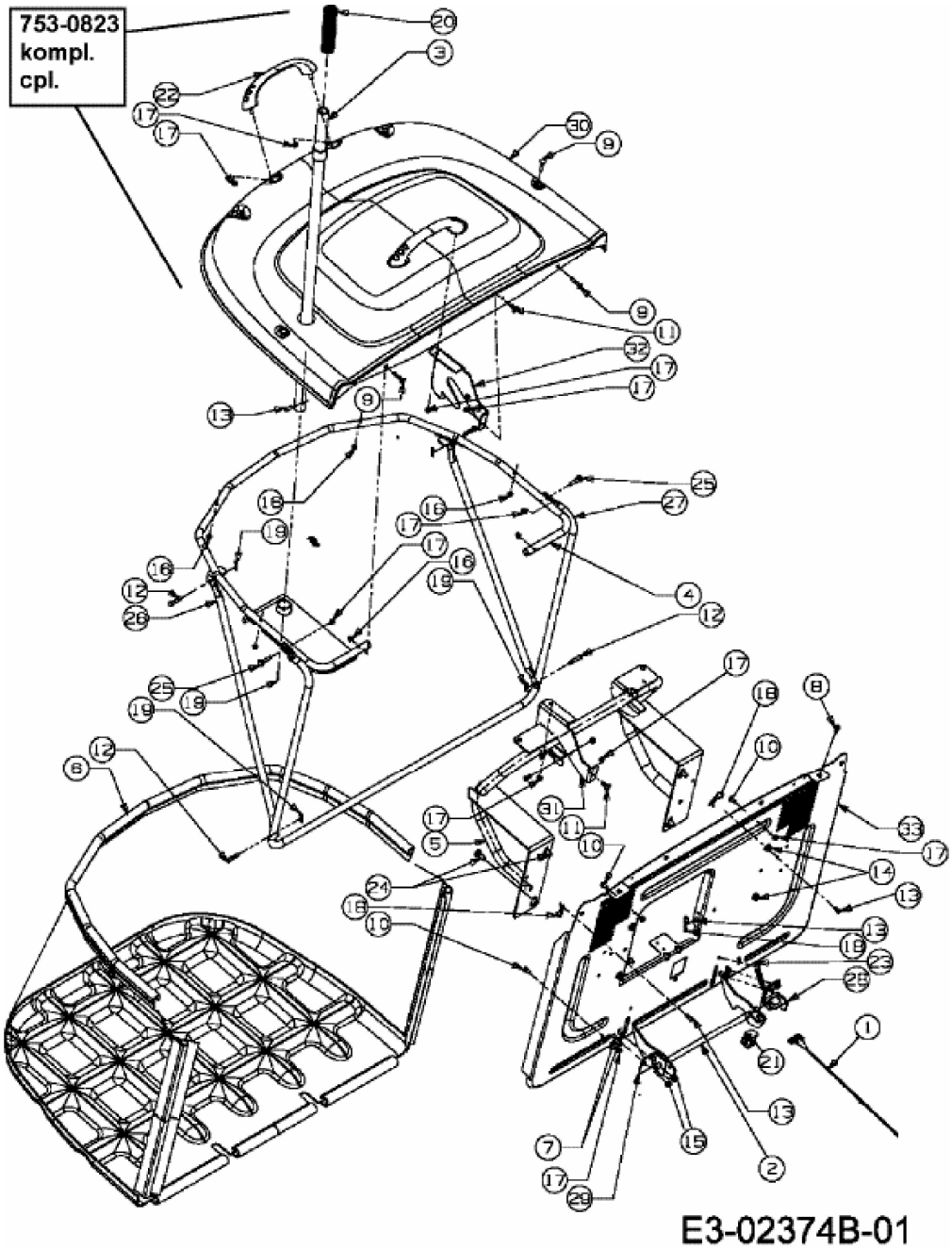RMH 514-92 A > 13CH507E628 (2007) > GRASFANGVORRICHTUNG