RMH 514-92 A > 13CH507E628 (2007) > PEDALE

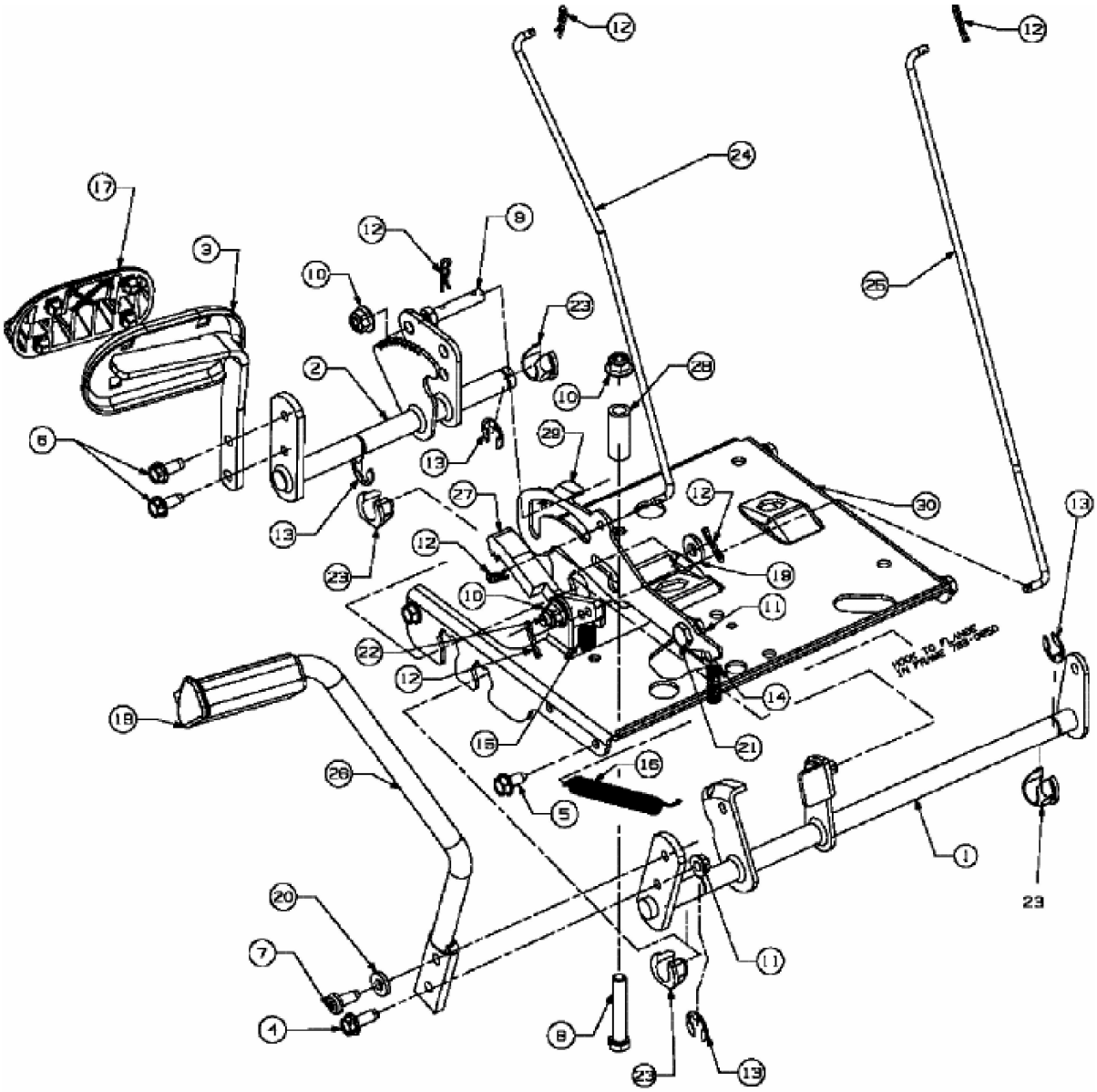

E3-02030B-01