RMH 514-92 A > 13CH507E628 (2005) > PEDALE

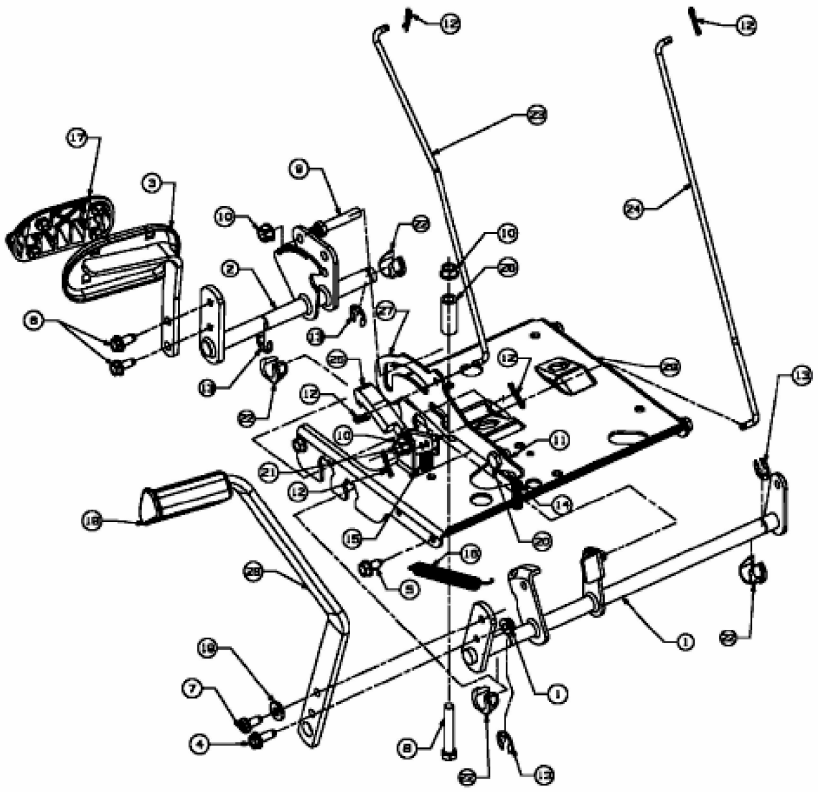

E3-002030A