AE 5150 K > 13CG504E643 (2008) > ARMATURENBRETT

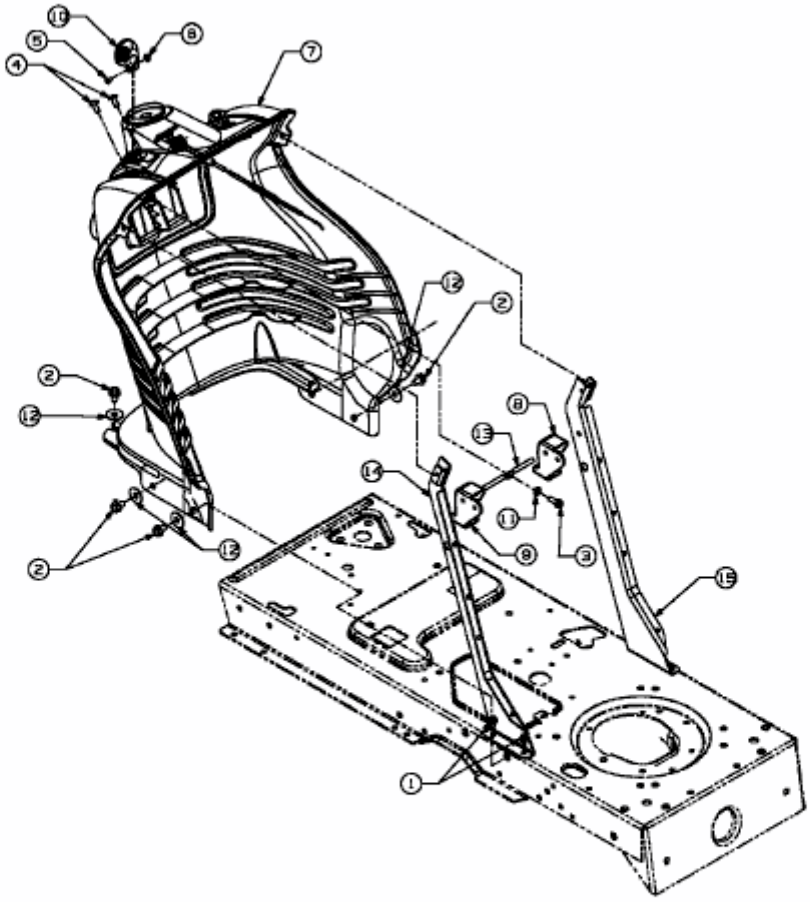

E3-02066A-01