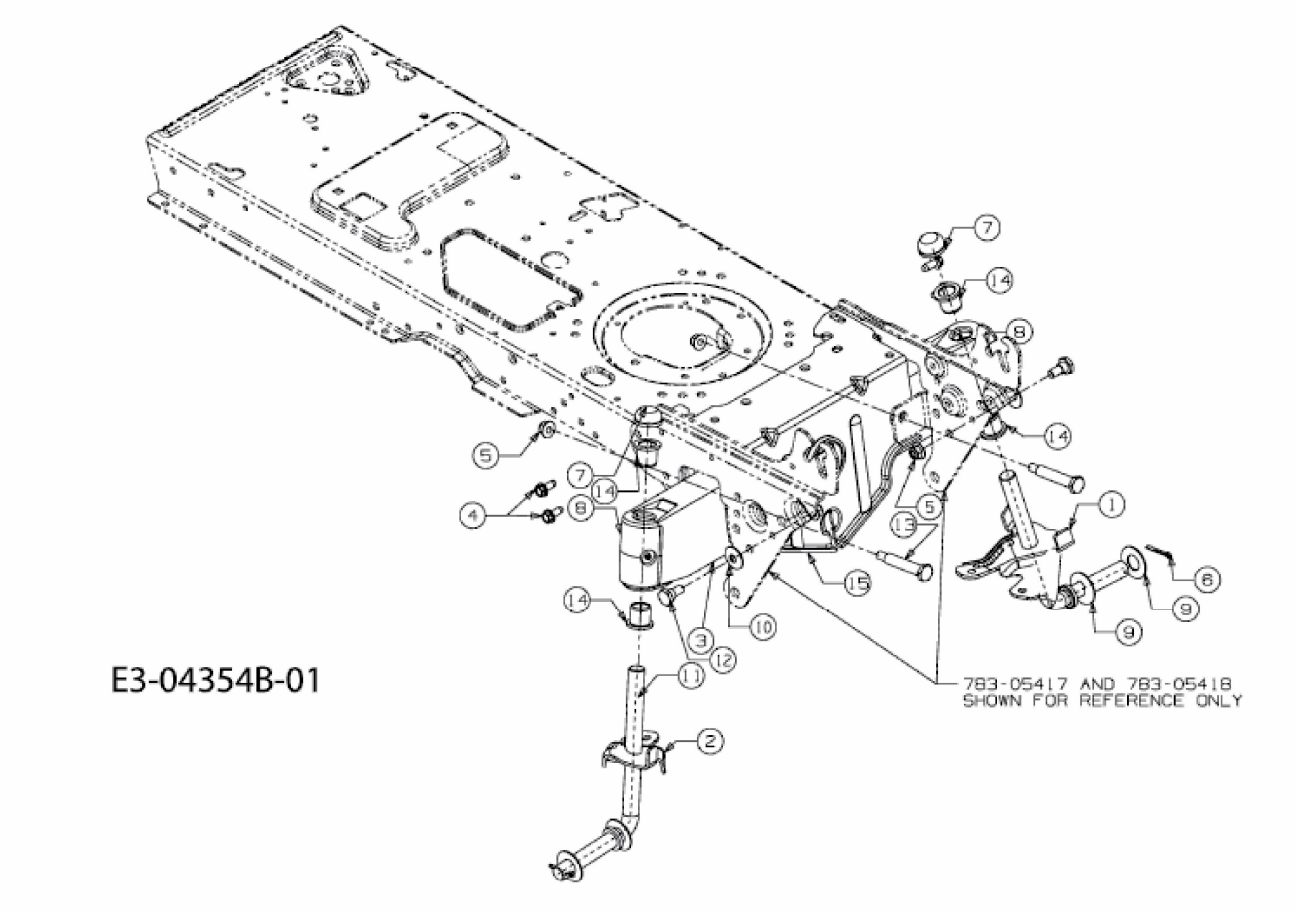
E3-04354B-01
783-05417 AND 783-05418
SHOWN FOR REFERENCE ONLY