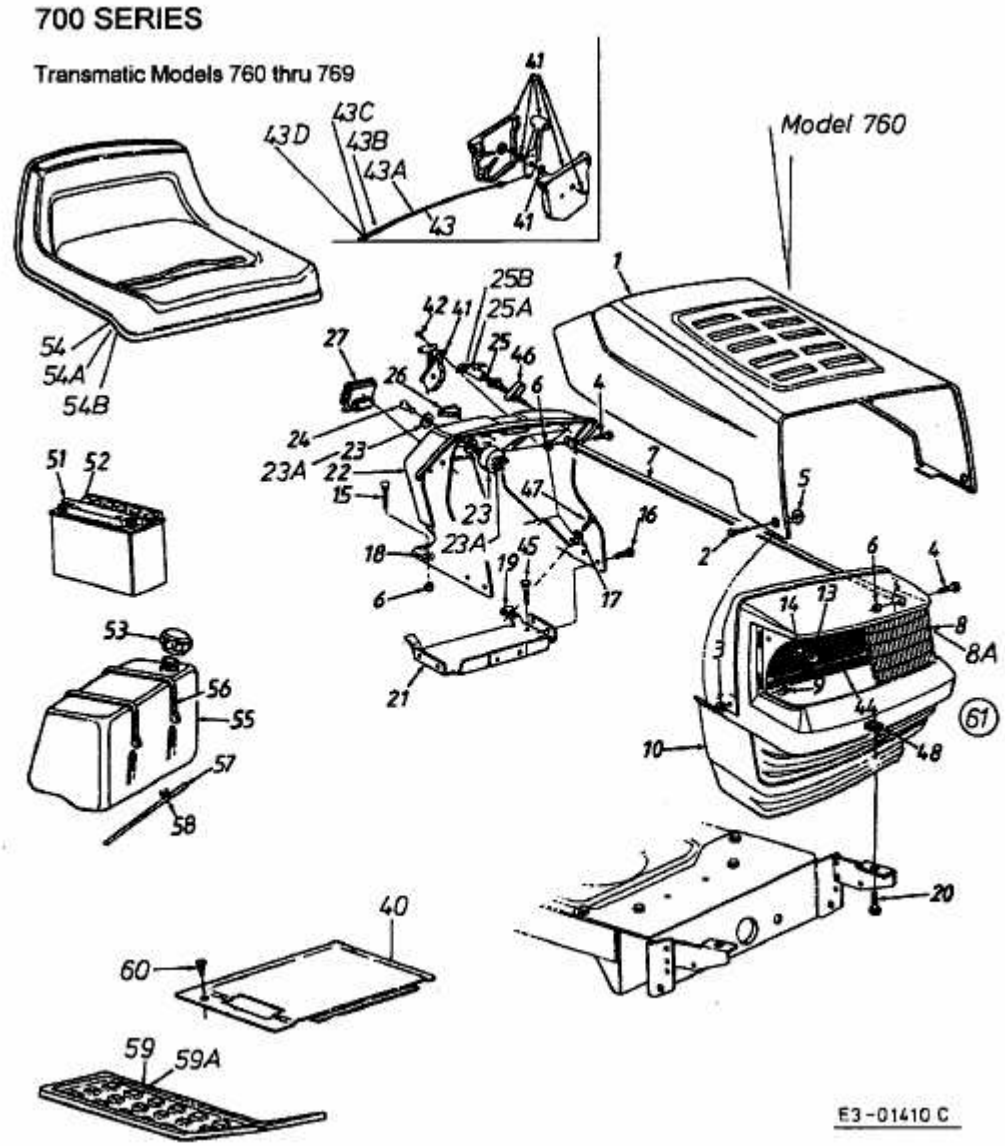SPRINT 3000 > 13CF76GN604 (1999) > MOTORHAUBE 0-STYLE