MF 41-22 RD > 13CF51CN695 (2011) > HECKPLATTE

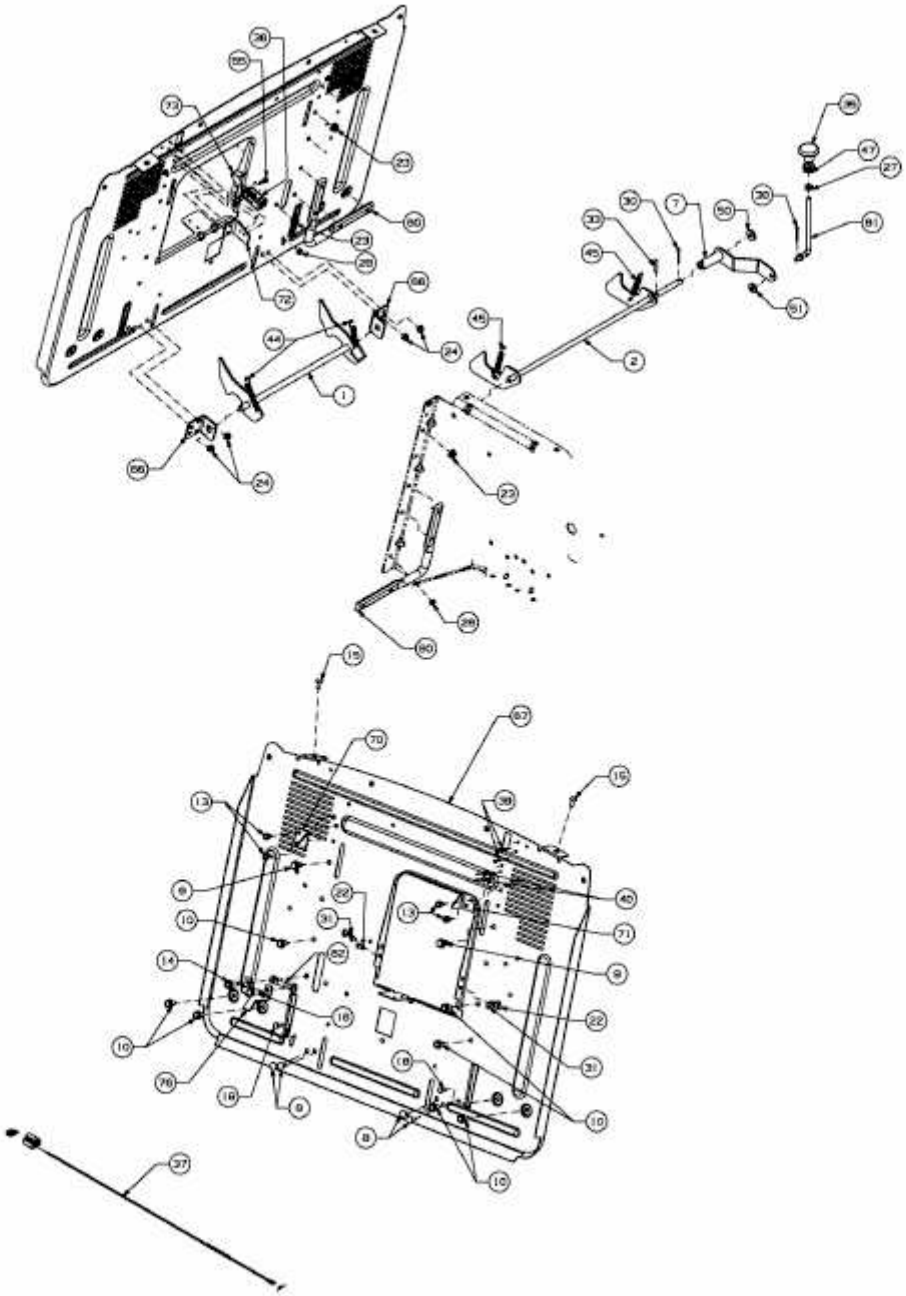

E3-06673A-02