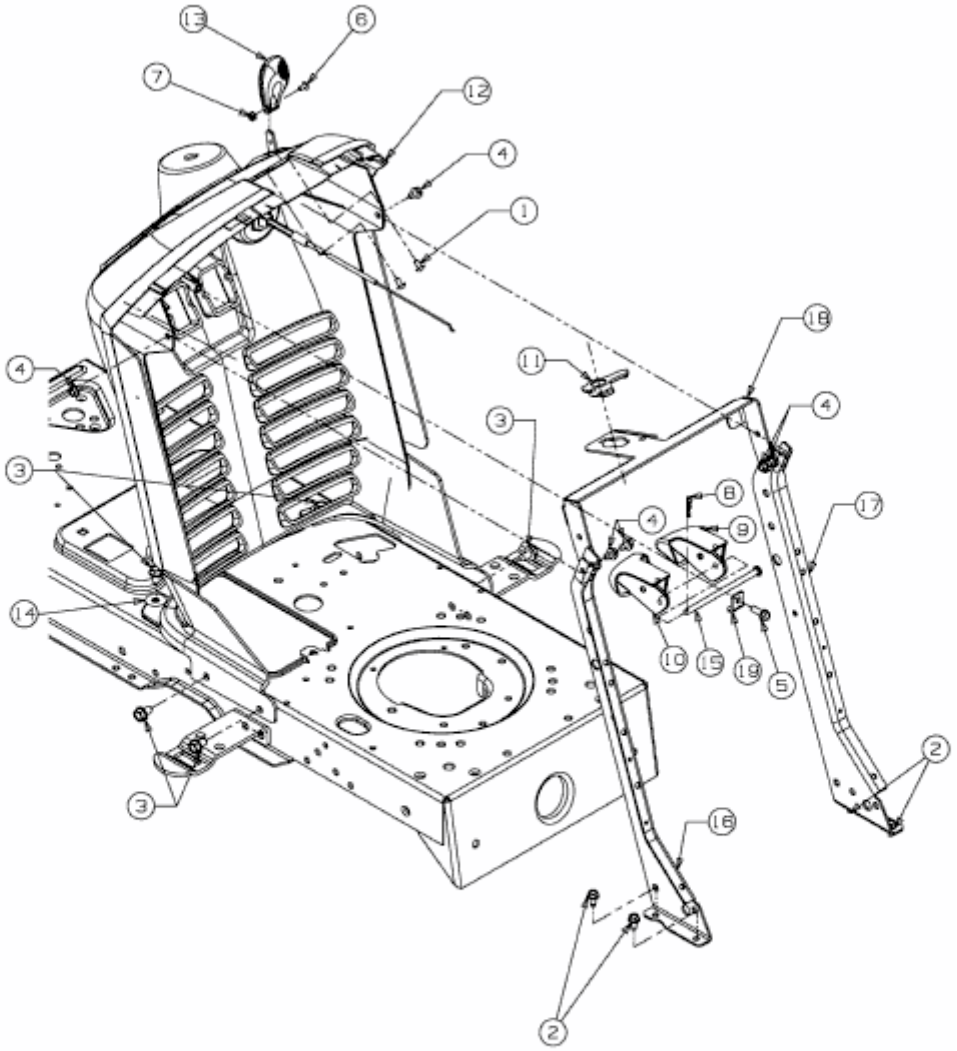MF 36-22 HG > 13CF51CI495 (2009) > ARMATURENBRETT