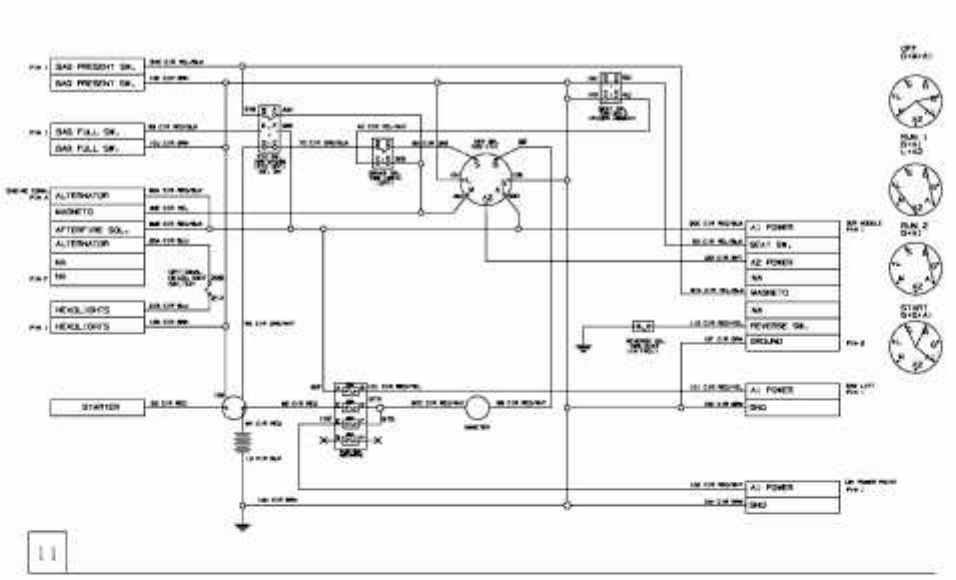
GAS PRESENT SW.
GAS PRESENT SW.
GAS FULL SW.
GAS FULL SW.
ALTERNATOR
MAGNETO
AFTERFIRE SOL.
ALTERNATOR
NA
NA
HEADLIGHTS
HEADLIGHTS
STARTER
A1 POWER
SEAT SW.
A2 POWER
NA
MAGNETO
NA
REVERSE SW.
GROUND
A1 POWER
GND
A1 POWER
GND
11

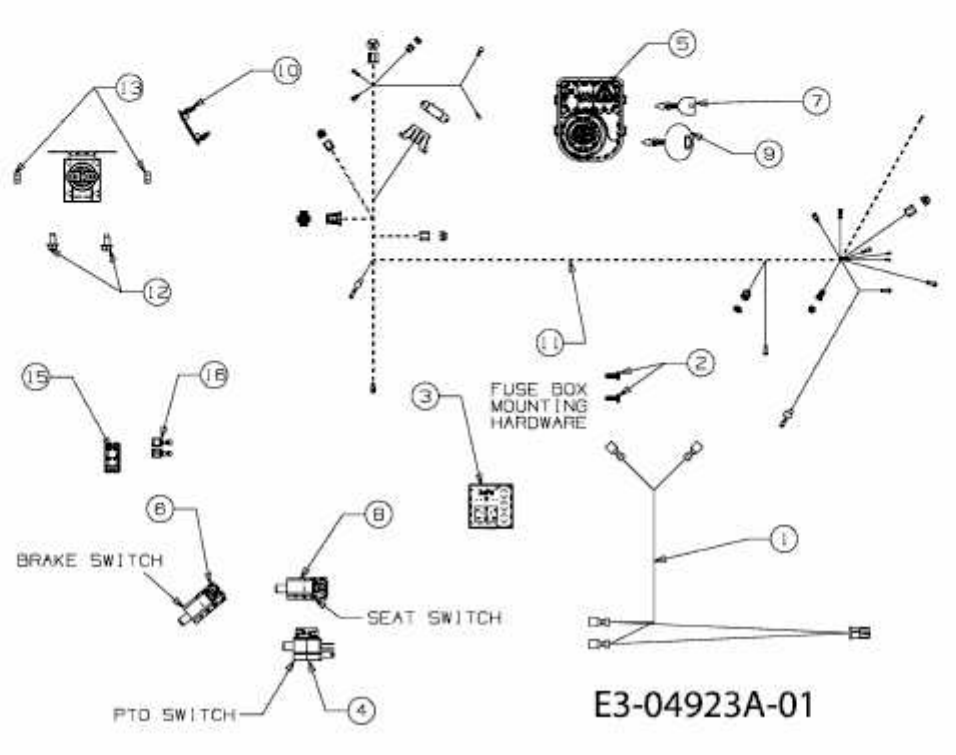
13
10
5
7
9
12
11
2
15
16
3
FUSE BOX
MOUNTING
HARDWARE
8
8
1
BRAKE SWITCH
SEAT SWITCH
PTO SWITCH
4
E3-04923A-01